BAHRAIN ROTAX MAX CHALLENGE 2026-27

TECHNICAL REGULATIONS

V 2.0

1. GENERAL

ANYTHING WHICH IS NOT EXPRESSLY ALLOWED IN THE TECHNICAL REGULATIONS IS FORBIDDEN.

Headings in this document are for ease of reference only and do not form part of the regulations.

1.1 CATEGORIES

Karts used in the Bahrain Rotax MAX Challenge 2026-27 (BRMC 2026-27) are divided into the following categories:

- 125 Micro MAX
- 125 Mini MAX
- 125 Junior MAX
- 125 Senior MAX
- 125 MAX DD2

Note:

The 125 Junior MAX engine is the basis for the engine configurations 125 Micro MAX and 125 Mini MAX. Only the deviations for 125 Micro MAX and 125 Mini MAX from the standard Technical Regulation for the 125 Junior MAX engine are defined.

The 125 Senior MAX engine is the basis for the engine configurations in the 125 Senior MAX Masters class with regards to all the component related regulations, except for class weight and drivers age.

The 125 MAX DD2 engine is the basis for the engine configurations in the 125 MAX DD2 Masters class with regards to all the component related regulations, except for class weight and drivers age.

1.2 AMOUNT OF EQUIPMENT

For each BRMC race event (from Free Practice to the Final), unless otherwise specified in the Supplementary Regulations, the following maximum amount of equipment is allowed for each Driver:

- 1 chassis
- 1 set of dry tires* (marked at pre-event scrutineering) – total 2 front tires + 2 rear tires
- 2 engines (registered at pre-event scrutineering) ^

* In the event of a race tire being damaged, it will be the decision of the technical scrutineer to allow or not a replacement tire. The damage must be reported to the scrutineer immediately after the on-track action where the damage occurred, and prior to leaving the parc ferme / scale area. The competitor will have to get it marked by the technical scrutineer before using it.

^ Any use of the second registered engine must receive prior approval from the Chief Scrutineer and officially recorded. Any second registered engine used at a session without prior approval of the Chief Scrutineer will be reported to the Stewards.

2. EQUIPMENT

2.1 CHASSIS 125 MICRO MAX & 125 MINI MAX

BRMC 2026-27

Any chassis with a valid FIA Karting homologation, with dimensions as specified in the FIA Karting 2026 Technical Regulations (updated 8 April 2026) Group 3 Regulations Article 10.1.1 Chassis Dimensions and 10.2 Rear Axle page 33. Front brakes are not allowed.

2.2 CHASSIS 125 JUNIOR MAX & 125 SENIOR MAX

Any chassis with a valid FIA Karting homologation, dimensions as specified in the FIA Karting 2026 Technical Regulations (updated 8 April 2026) Group 2 Regulations Article 9.1.1 Chassis Dimensions and 9.2 Rear Axle page 22. Front brakes are not allowed.

2.3 CHASSIS 125 MAX DD2

Chassis with a valid FIA Karting homologation are allowed to be used. Chassis must be designed according to FIA Karting rules for shifter classes (front and rear brakes mandatory). The brake system, body work and front bumper must have a valid FIA Karting homologation.

Note

For the rear bumper either a system with a valid FIA Karting homologation or the Rotax rear tire protection system (according to illustration) must be used.

No part shall be added or removed from original content (except safety wire or bolt connection between pos.1 and pos.2 as well as number plate with support).

Rotax original (orange or red) protection rollers only are allowed to be used.

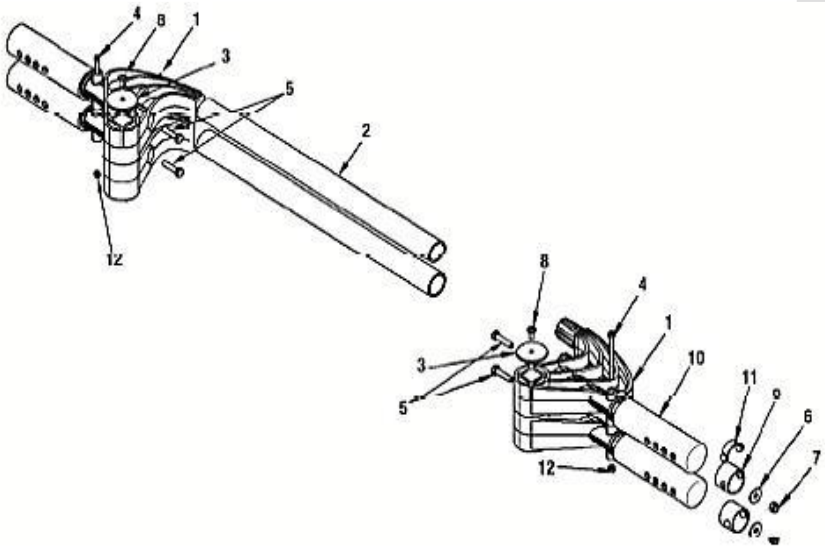

2.4 CHASSIS PROTECTION

It is permitted to attach chassis protectors to the chassis rails left, right and front. The only material permitted is plastic. The installation and wear must satisfy the scrutineers of the event.

2.5 BODYWORK 125 MICRO MAX, 125 MINI MAX, 125 JUNIOR MAX AND 125 SENIOR MAX

In accordance with regulations of FIA Karting 2026 Technical Regulations (updated 8 April 2026) Article 9 Group 2 Regulations and Article 10 Group 3 Regulations.

2.6 BODYWORK 125 MAX DD2/MASTERS

In accordance with regulations of FIA Karting 2026 Technical Regulations (updated 8 April 2026) Article 8 Group 1 Regulations.

2.7 TIRES

Only the following tires must be used:

CLASS	125 Micro MAX	125 Mini MAX	125 Junior MAX	125 Senior MAX	125 MAX DD2
TIRE	Mojo C2 CIK Mini	Mojo C2 CIK Mini	Mojo D2XX CIK Option	Mojo D5 CIK Prime	Mojo D5 CIK Prime
FRONT TIRE	4.0 / 10.0 - 5	4.0 / 10.0 - 5	4.5 / 10.0 - 5	4.5 / 10.0 - 5	4.5 / 10.0 - 5
REAR TIRE	5.0 / 11.0 - 5	5.0 / 11.0 - 5	7.1 / 11.0 - 5	7.1 / 11.0 - 5	7.1 / 11.0 - 5

Tires must be mounted according to the sense of rotation defined on the tire.

Strictly no modifications or tire treatment allowed. The measuring device MiniRAE Lite of the company <<RAE Systems Inc. (USA) >> may be used in the Qualifying Practice, Heat 1, Pre-Final and Final to check that the tires are in conformity with the regulations. The VOC measurement of the tires may not exceed 4 ppm (maximum limiting value) under any circumstances.

Note: Contamination of the tires, e.g. by chain spray, must be avoided since this can result in the limiting value being exceeded. Should the check establish that one or more tires are not in conformity with the regulations, the relevant Driver will not be allowed access to the Assembly Area: consequently, no participation in the corresponding part of the competition (Qualifying Practice, Heat 1, Pre-Final, Final).

Decisions regarding non-compliance of tires to the limiting values is not susceptible to appeal.

Tires used for the Event must be purchased from the Bahrain International Karting Circuit.

Tires will be marked by the Technical Scrutineers and shall remain under the responsibility of the Competitor.

Drivers must use only marked tires during Qualifying Practice, Heat 1, Pre-Final and Final sessions.

During Free Practice only, the use of marked tires is optional, Drivers may use used tires of the same brand and specification, provided they comply with the required specifications.

In the exceptional event that insufficient quantities of these tires are available, BIKC reserve the right to provide a suitable substitute tire in consultation with the BMF. Competitors will be notified of any such changes in the Supplementary Regulations applying to the Event.

2.8 DATA ACQUISITION

Systems which permit the reading/recording of following data only are allowed:

(1) Lap time (2) Engine rpm (by induction on the high-tension cable) (3) Two indications of temperature (4) The speed of one wheel (5) Acceleration in X/Y direction (6) Position (via GPS system) (7) Steering wheel angle sensor (8) Connection of the data acquisition system to the

BMC 2026-27

original Rotax battery is allowed (9) During Free Practice also, telemetry systems are allowed. (10) ROTAX Trax system, including the ROTAX 3D printed mounting.

2.9 COMPOSITE MATERIALS

Composite materials (carbon-fiber etc.) are banned except for the chain guard, seat and the floor tray.

Alloys from different metals/substances are not considered as composite materials.

2.10 SAFETY EQUIPMENT

Overalls, helmets, kart shoes, gloves and other kind of driver protection must comply with the regulations of the stipulated in BRMC 2026-27 Sporting Regulations Article 10.

2.11 FUEL / OIL

Fuel: Unleaded Pump Gasoline - 95 Octane
Oil: XPS KART TEC 2 STROKE FULL SYNTHETIC OIL or XPS CASTOR RACING OIL 2T mixed at a 2% ratio.
Competitors will be notified by BIKC of the specific type of oil to be used for the Event through the Supplementary Regulations.
The Fuel /Oil mixture shall be supplied Premixed by BIKC, in accordance with Article 9.8 of the BRMC 2026-27 Sporting Regulations.

2.12 ADVERTISING ON ENGINES

No sponsor stickers are allowed on the engine and engine accessories, except ROTAX, BRP, Mojo, XPS, Original SODI KART, BIKC badges and the following plates attached to the cylinder unless specifically directed by means of a Bulletin or Supplementary Regulation.

For clarification purposes:
Overflow bottles, fluid catch can, fuel line and any accessories with manufacturer branding is permitted to be used on the engine or its accessories.

It is not permitted for a ROTAX service center to call themselves a manufacturer of such items to work around this regulation.

3. ENGINE SEALING, SCRUTINIZING

Only Engines conforming to the following technical regulations only, and purchased only from the following are legal to be used:

1. **Bahrain International Karting Circuit - BIKC (ROTAX Authorised Distributor)**
2. **ROTAX MAX Challenge World Finals**

Only Engines which have been checked and sealed **after 1st September 2026**, by the following are allowed to be used:

1. **Bahrain International Karting Circuit - BIKC (ROTAX Authorised Distributor)**

By sealing an engine, the BIKC (ROTAX Authorized Distributor) and their Service Center take over the responsibility for the conformity of the engine with according to the BRMC 2026-27 Technical Regulations. Also, a brand new engine (must be purchased from BIKC only) must be checked according to the Technical Specification before sealing.

The engines have to be sealed with specific ROTAX engine seals (black anodized aluminum seal with "ROTAX" logo and a 6-digit serial number and a barcode).

Seals with barcode only are legal to be used.

Further legal seals are:

- Black anodized aluminum seals with "JAG" logo and 6-digit serial number.
- Red anodized aluminum seals with "JAG" logo and 6-digit serial number.
- Blue anodized seals with 6-digit number (Kombikart)
  Black anodized aluminium seals with "Korridas" -logo and 6-digit serial number

By means of the steel cable the engine must be sealed

- on one Allen screw (pos.1) of the intake flange,
- on one stud screw (pos.2) of cylinder and
- one Allen screw (pos.3) of the cylinder head cover (see attached pictures).

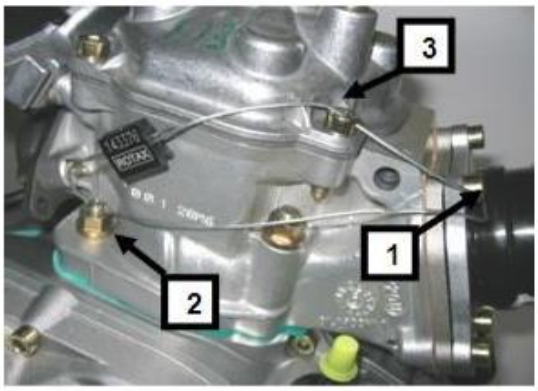

BRMC 2026-27

After sealing the engine seal thread must be squeezed using caliper ROTAX 276110 (see picture of engine seal).

It is not allowed to pass the end of the sealing wire through the seal a second time (as shown in picture only).

At every new sealing of an engine the Service Centre that checks and seals an engine is responsible for following indications at the Engine Identity Card which belongs to the owner of the engine.

- Serial no. of the engine
- Serial no. and date of the engine seal
- Stamp and signature of the ROTAX Authorised Distributor/Service Center (BIKC)

At scrutineering, the Driver must be present and has to present:

- The engine(s) with the undamaged engine seal(s)
- The Engine Identity Card(s), showing the matching engine serial no.(s), the matching engine seal no.(s) and date of the engine seal, the stamp(s) and signature(s) of ROTAX Authorised Distributor (BIKC) that has checked and sealed the engine(s).

Only the ROTAX Authorised Distributor (BIKC) Service Center will be allowed to re-seal an engine between scrutineering and the final in the case of an engine failure.

The sealing of engines helps to reduce the times for scrutineering at races as during the race event just the accessories (carburetor, exhaust, radiator ….) must be checked.

Of course, scrutineers can request the ROTAX Authorised Distributor (BIKC) Service Center to break the engine seal, open and re-check an engine according to the Technical Specification, before or after a race or in case of a protest. If an engine seal has been broken (for which reason ever), the engine has to be checked completely according to the Technical Specification and must then be re-sealed by the BIKC Service Centre only. Re-sealing may only be carried out at the discretion of BIKC. If it is ascertained that an engine has been tampered with in any way, the matter will be reported to the stewards.

NOTE:

FOR ALL COMPONENTS OUTSIDE THE ENGINE SEAL, THE COMPETITOR IS RESPONSIBLE TO ASSURE THE CONFORMITY WITH THE TECHNICAL REGULATIONS.

ALL COMPONENTS OUTSIDE THE ENGINE SEAL IS RECOMMENDED TO ORGINATE FROM BIKC.

BRMC 2026-27

4. ENGINE MODIFICATIONS, REPAIRS AND ADDITIONS

4.1 MODIFICATIONS

Neither the engine nor any of its ancillaries may be modified in any way. “Modified” is defined as any change in form, content or function that represents a condition of difference from that originally designed. This is to include the addition and/or omission of parts and/or material from the engine package assembly unless specifically allowed with these rules. The adjustment of elements specifically designed for that purpose shall not be classified as modifications, i.e. carburetor and exhaust valve adjustment screws.

The repair of a thread on the crankcase (maximum of three threaded holes per crankcase) using a “heli-coil” or similar is allowed.

Exception: The threads located under the crankcase to fix the crankcase on the engine mount may be repaired as needed.

The repair of a thread on the cylinder (maximum of three threaded holes per cylinder) using a “heli-coil” or similar is allowed.

Genuine ROTAX components only that are specifically designed and supplied for the 125 Micro MAX, 125 Mini MAX, 125 Junior MAX, the 125 Senior MAX and the 125 MAX DD2 engine are legal, unless otherwise specified.

These are recommended to originate from Bahrain International Karting Circuit (Authorised Rotax Distributor).

Note:

ANYTHING WHICH IS NOT EXPRESSLY ALLOWED IN THE TECHNICAL REGULATIONS IS FORBIDDEN.

4.2 INTERNAL ADDITIONS

No additional material may be added except in the case of engine repairs and shall only restore the engine or components to original specifications. The use of thermal barrier coatings/ceramic coatings on or in the engine and on or in the exhaust system is prohibited. The use of anti-friction coatings in or on the engine/engine components is prohibited.

Example of allowed repairs (but not limited to)

Example 1, Damaged Cylinder

It is allowed to repair the cracked cylinder by welding.

It would also be allowed to dress / finish the area marked red to restore the part to the original specification.

It would not be allowed to dress / finish areas not effected by damage.

BMMC 2026-27

Example 2, Exhaust valve flange area repair. Only allowed on cylinder ID codes 223933 and 613933.

Exhaust valve flange area (marked red) is damaged through contact wear with the exhaust valve.

It would be permitted to repair the red marked area only.

To dress or finish the area which was repaired in the red area would be allowed to ensure the engine is restored to its original specification.

Note:

Removal of additional as supplied material from the surrounding areas is strictly forbidden.

4.3 LEGAL ADDITIONS

Chain guard, engine mount, temperature gauge and tachometer/hour meter, catch cans for liquids with mounting brackets.

ROTAX 3D printed mount for TRAX device secured to ROTAX battery cover.

Customizing the cylinder head cover by painting is legal.

Sensor for exhaust gas temperature (see exhaust systems).

4.4 NON-TECH ITEMS

Non-original fasteners, circlips, washers, throttle cable housing, fuel and pulse line (type and size) as well as length of coolant hoses are allowed unless otherwise specified.

4.5 MEASUREMENTS

When taking any dimensional reading, of the following technical regulation, in the order of accuracy of 0.10mm or even more precise, the temperature of the part must be between +10°C and +30°C.

Before taking any decision based on this regulation a check for available Bulletins is mandatory.

To avoid excessive noise and exhaust emissions revving the engine in the servicing park is not allowed. Starting of engines is only allowed in the “Servicing Park In” and engines may only be run there for a maximum of 5 seconds.

5. TECHNICAL SPECIFICATION WITHIN THE ENGINE SEAL FOR ROTAX MAX KART ENGINES

5.1 SQUISH GAP

The crankshaft must be turned by hand slowly over top dead center to squeeze the tin wire.

The squish gap must be measured on the left and right side in the direction of the piston pin.

The average value of the two measurements counts.

BRMC 2026-27

		Minimum
125 Micro MAX	3-mm tin wire (Rotax 580132)	2.40 mm
125 Mini MAX	2-mm tin wire (Rotax 580130)	1.20 mm
125 Junior MAX	2-mm tin wire (Rotax 580130)	1.20 mm
125 Senior MAX	2-mm tin wire (Rotax 580130)	1.00 mm
125 MAX DD2	2-mm tin wire (Rotax 580130)	1.30 mm

Table 1

To achieve the defined minimum squish gap one spacer (Rotax 626420, with same shape as cylinder base gasket) in combination with at least two-cylinder base gaskets (one below the spacer and one above the spacer) must be used.

The BIKC Service Center reserves the right to prescribe a non-negotiable mandatory minimum squish gap greater than the values listed in Table 1 above, in order to mitigate the risk of technical non-conformity caused by carbon deposits on the piston.

5.2 COMBUSTION CHAMBER INSERT

Cast identification code has to be either:

- 223389 2/1
- 223389 2/2
- 6223387 1
- 6223387 2

The profile of the combustion chamber insert has to be checked with a template (ROTAX 277390).

The crack of light between the template and the profile of the combustion chamber insert must be the same over the whole profile.

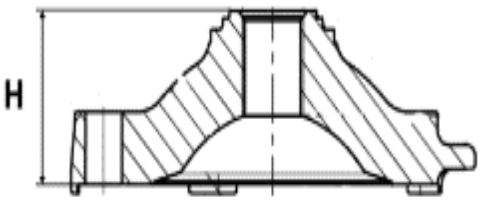

Height (H) of combustion chamber insert has to be 28.80 mm +/- 0.2 mm (H).

BIKC 2026-27

Casted wording "ROTAX" and/or "MADE IN AUSTRIA" must be shown on components 223389 2/1 and 223389 2/2.

Combustion chamber insert marked 6223387 1 and 6223387 2 must appear as shown below.

5.3 PISTON WITH RING ASSEMBLY

Original, coated, aluminum, cast piston with one piston ring. The piston has to show on the inside the cast wording "ELKO" (1) and "MADE IN AUSTRIA" (2).

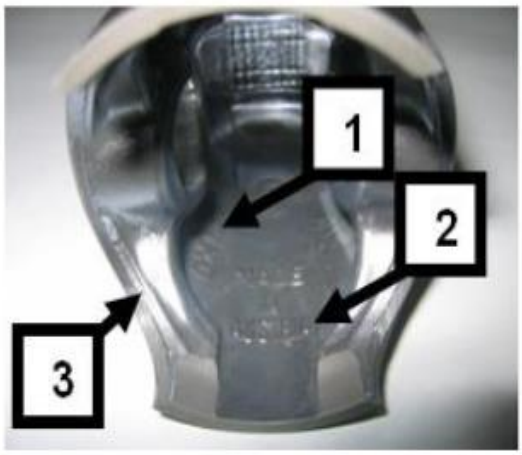

Machined area are:

- Top end of piston
- Outside diameter
- Groove for the piston ring
- Bore for the piston pin
- Inside diameter at bottom end of piston and some pre-existing factory removal (3) of flashing at the cut out of the piston skirt

All other surfaces are not machined and have cast surface.

Any mechanical treatment or rework of the piston is forbidden, (Altering the pistons profile by reworking carbon build-up is forbidden, if carbon is removed it must be consistently removed across the entire surface without altering the profile of the piston itself).

Example, selectively removing carbon in the squish measurement areas is forbidden.

Original, magnetic, rectangular piston ring.

Ring height: 0.98 +/- 0.02 mm.

BRMC 2026-27

Piston ring is marked either with:

- ROTAX 215547
- ROTAX 215548
- ROTAX 215548 X
- I ROTAX 215548 X

The piston ring is legal also if just parts of the marking are still visible.

5.4 PISTON PIN

Piston pin is made out of magnetic steel. Dimensions must be according to the drawing.

The minimum weight of the piston pin must not be lower than 31.00 grams.

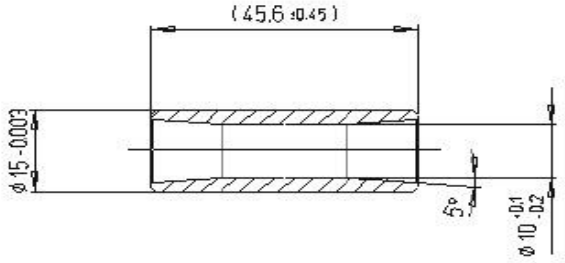

5.5 CYLINDER

Light-alloy-cylinder with GILNISIL or NiCaSil -plating.

Any re-plating of cylinder is not allowed.

Maximum bore of cylinder = 54.035 mm (measured 10 mm above the exhaust port).

5.5.1 CYLINDER HAS TO BE MARKED WITH THE "ROTAX" LOGO (SEE PICTURES BELOW).

125 Micro MAX, 125 Mini MAX and 125 Junior MAX:

Cylinder with one main exhaust port and without exhaust valve.

Cylinders marked with identification 413530 only are legal to be used.

BRMC 2026-27

125 Senior MAX:

Cylinder with one main exhaust port and exhaust valve.

Cylinders marked (cast or machined) with identification code 223993 or cast 413 531 only are legal to be used.

125 MAX DD2:

Cylinder with one main exhaust port and two side exhaust ports and exhaust valve.

Cylinder has to be marked with identification code 613933 or 613934.

5.5.2 HEIGHT OF CYLINDER

Measured with a digital caliper min. length 200 mm.

	Height	Tolerance
125 Micro MAX	87.00 mm	+0.1 mm -0.05 mm
125 Mini MAX	87.00 mm	+0.1 mm -0.05 mm
125 Junior MAX	87.00 mm	+0.1 mm -0.05 mm
125 Senior MAX / Masters	87.00 mm	+0.1 mm -0.05 mm
125 MAX DD2 / Masters	86.70 mm	+0.1 mm -0.05 mm

5.5.3 CYLINDER SURFACES (ID CODE 223993 OR 613933)

All transfer ports and passages have cast finish surface except some removal (done by the manufacturer) of cast burr at the inlet passage, exhaust port and passages. All ports have chamfered edges to prevent ring snagging. Any additional machining is not permitted.

The top edge of exhaust port may show some pre-existing machining from the manufacturer. The sealing flange for the exhaust socket may show signs of machining from the manufacturer.

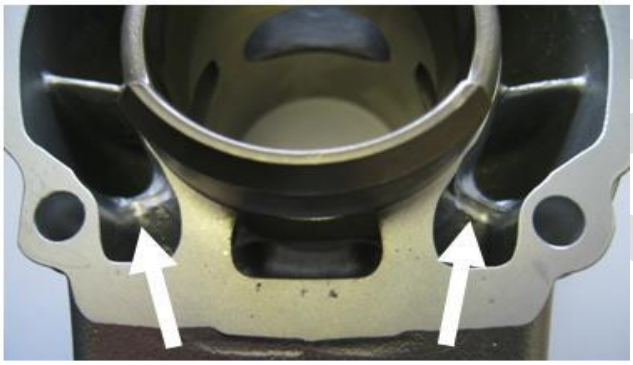

BRMC 2026-27

Important

All ports have chamfered edges. Any additional machining is not permitted.

Cylinders marked 223993 and 613933 the upper edge of the central boost port may show factory machining.

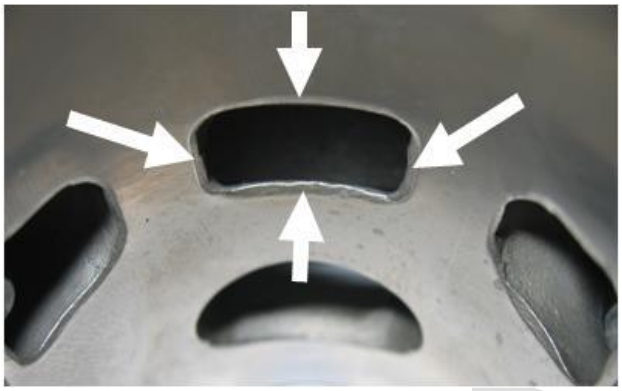

Important

The flange for the exhaust socket may show either cast finish or machined surface.

Machined surface can be either flat or show a circular sealing bump.

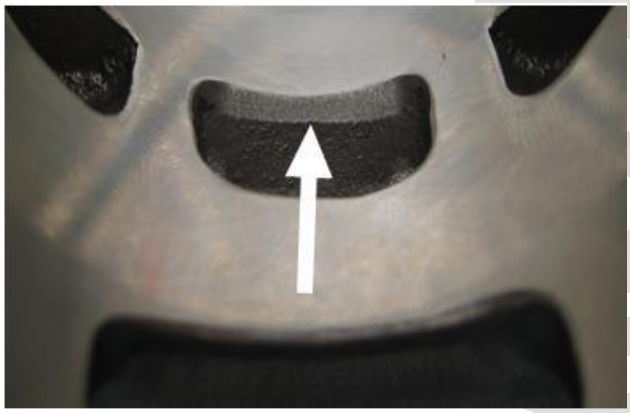

The top edge of the exhaust port may show either just a cast finish surface (left picture) or signs of a CNC machining (central picture) or signs of CNC machining in combination with signs of manual grinding (right picture).

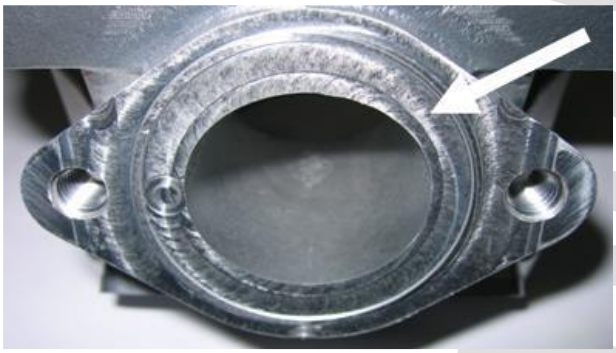

The exhaust port may show partial manual grinding done by the manufacturer to eliminate minor casting defects and/or to eliminate the NIKASIL burr at the end of the NIKASIL plating (see above right picture).

Single Core Cylinder:

Cylinders marked 223993 may show in the inlet port a linear texture.

Cylinders marked 223993 with linear texture in the inlet port show a fully CNC machined exhaust port and a fully CNC machined top edge of the central boost port.

Cylinders marked 613933 may show in the inlet port a linear texture.

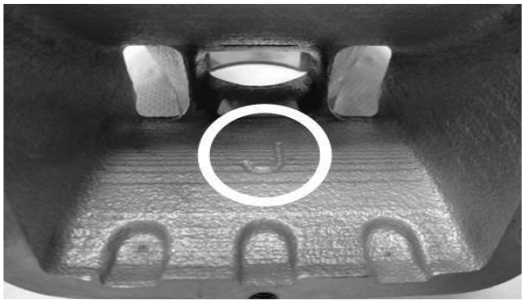

Single Core Cylinder

Linear structured cast finish surface

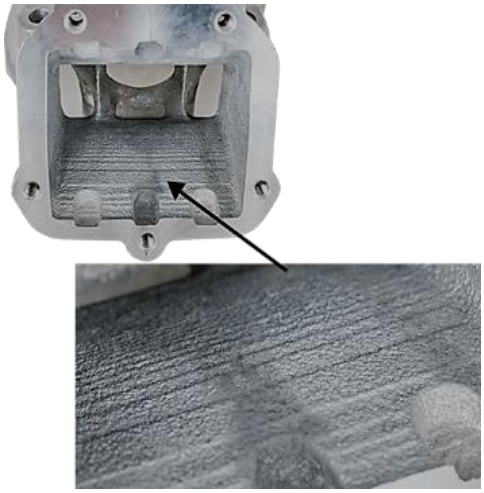

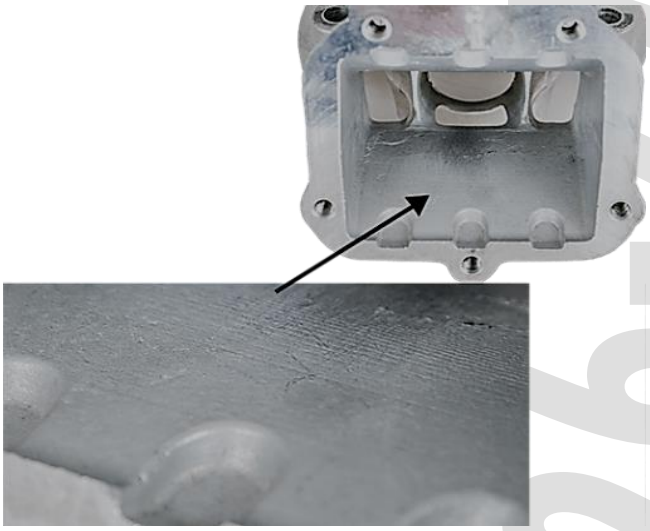

5.5.4 CYLINDER SURFACES (ID CODE 413530, 413531 OR 613934

All transfer ports and passages (1) have a uniform smooth cast finish.

All ports, port heights, and chamfer of the ports show signs of extended CNC control machining (2).

The sealing flange for the exhaust socket shows a cast finish.

Any additional machining is not permitted.

All cylinders are marked with the ROTAX RACING logo (5) and QR code (4). It is allowed to use a cylinder with a faded or worn QR code.

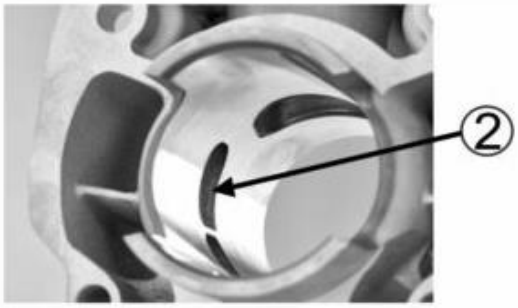

BMF 2026-27

For Cylinders marked ID code 413531 and 613934 a NiCasil plated stop for the exhaust valve is present (3).

Any additional machining is not permitted.

5.5.5 EXHAUST PORT SHAPE

Cylinder 223993 with fully CNC machined exhaust port only:

The horizontal and vertical dimensions of the exhaust port have to be checked with the template, marked with 676245*.

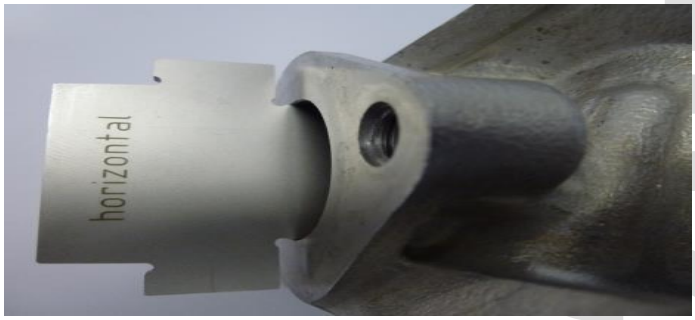

Normal cast finish surface.

Cylinder 413530

The horizontal and vertical dimensions of the exhaust port have to be checked with the template, Rotax 676242.

Cylinder 413531

The horizontal and vertical dimensions of the exhaust port have to be checked with the template, Rotax 676247.

The template has to be moved in horizontal and vertical position as far as possible into the exhaust port.

In both directions, the template may not touch the flange for the exhaust socket. (Checked without the gasket between the cylinder and exhaust socket).

5.5.6 EXHAUST PORT TIMING (CYLINDER ID CODE 223993, 613933)

The "exhaust port timing" (distance from the top of the cylinder to the top of the exhaust port) has to be checked by means of the template (ROTAX 277402). Insert the template into the cylinder and move the template (at the highest point of the exhaust port) as far as possible into the exhaust port. In this position the template may not touch the cylinder wall.

Take care to use the correct gauge for:

- Senior MAX
- MAX DD2

5.5.7 EXHAUST PORT TIMING (CYLINDER ID CODE 413530, 413531, 613934)

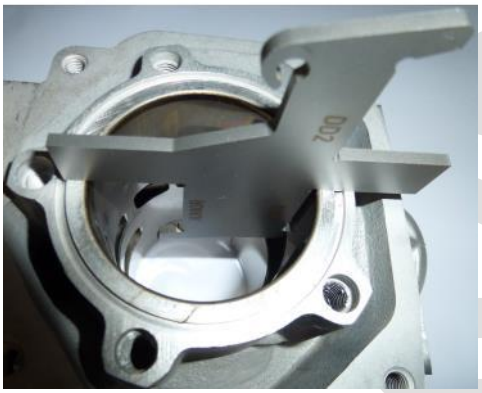

The "exhaust port timing" (distance from the top of the cylinder to the top of the exhaust port) has to be checked by means of the template (ROTAX 277404).

Insert the template into the cylinder and move the template (at the highest point of the exhaust port) as far as Possible into the exhaust port.

In this Position the template may not touch the cylinder wall.

Take care to use the correct gauge for:

- Junior MAX (Junior template to be used for Micro MAX and Mini MAX)
- Senior MAX
- MAX DD2

5.6 INLET SYSTEM

5.6.1 REED VALVE ASSY.

The reed valve assy. is equipped with 2 petal stops and 2 reeds, each having 3 petals.

BRMC 2026-27

	Thickness	Tolerance
Reed Valve	0.6 mm	+0.10 mm
		-0.10 mm

Flattening of the curved reed valve stopper plates is forbidden.

The minimum gap between the 2 stopper plates must be greater than 16.70mm.

The measurement must be taken using a digital calliper from the inside surface of the stopper plates in line with the middle of each reed petal, as indicated by the red lines in the picture.

BIKC Service Center reserves the right to prescribe a non-negotiable mandatory minimum gap between the 2 stopper plates, ranging between 19.20 mm and 19.50 mm.

For 125 Micro MAX and 125 Mini MAX only.

It is mandatory to add 2 x additional “distance plates” to the reed block assy.

The “distance plates” must be secured tightly between the reed petals and the curved stopper plate on both sides of the reed assy and in the order as show in the diagram. The ROTAX markings must be facing the stopper plate as shown in the diagram.

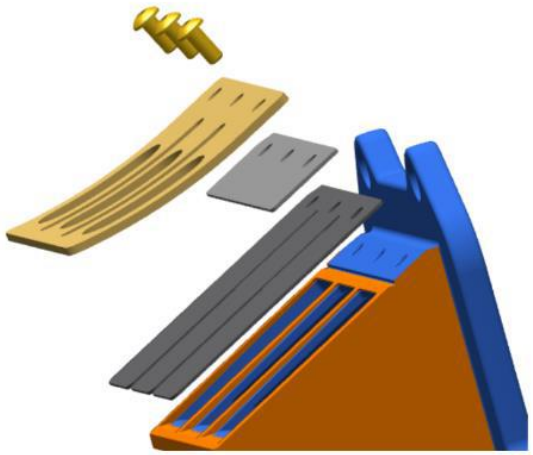

It is allowed to install up to 2 gaskets between the reed block assy and the cylinder.

Note:

The use of distance plates is prohibited in the 125 Senior MAX or 125 MAX DD2 categories.

In the 125 Junior MAX category, distance pates are permitted, but not mandatory, and where fitted must comply fully with these technical regulations.

For Information only / non-tech item:

The assembly should utilize only oval head screws M3x6 (ROTAX Part number 240351).

The use of tap tight fixings is not recommended for this application.

For identification purposes that the distance plates are installed, a M6 washer should be placed under the bolt which is secured with the seal in position 1, as indicated in the picture.

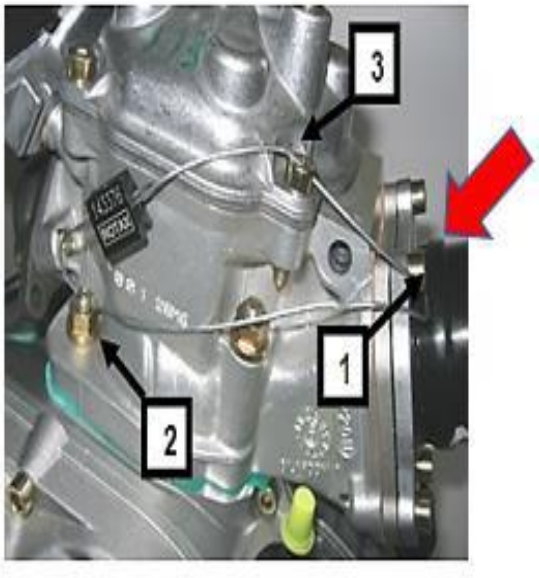

The 2 x distance plates must be engraved ROTAX (as per the drawing below)

The plate must be flat with no curvature, and meet the below specification.

A ROTAX part number may be engraved on the plate.

	Measurement	Tolerance
A	22.00 mm	+0.2 mm -0.2 mm
B	10.00 mm	+0.3 mm -0.3 mm
C	16.00 mm	+0.3 mm -0.3 mm
D	66.00 mm	+0.7 mm -0.7 mm
Distance plate thickness	0.70 mm	+0.08 mm -0.08 mm
Location holes	3.3 mm	+0.2 mm -0.2 mm

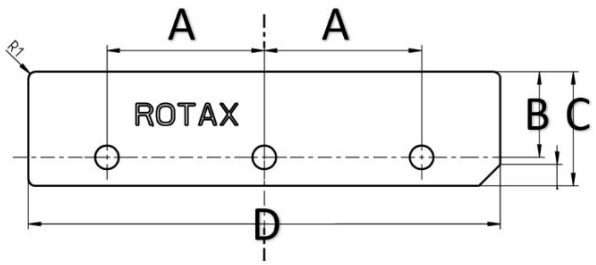

BRMC 2026-27

5.6.2 INLET MANIFOLD

Some factory flash removal may be present at the conjunction of the inside contour and the carburetor stop mounting face. This is a manual trimming operation consisting of a small corner break of less than 3mm in width. No additional grinding or machining is permitted.

125 Micro MAX, 125 Mini MAX, 125 Junior MAX and 125 Senior MAX:

Inlet manifold marked with the identification code "267915" and the name "ROTAX" or just "267916".

125 MAX DD2:

Inlet manifold marked with the identification code "267410" and the name "ROTAX" or just "267411".

5.7 CRANKSHAFT

5.7.1 CON ROD

	Length	Tolerance
Stroke	54.5 mm	+0.10 mm -0.10 mm

Con rod has to show forged numbers "213", "365", "367" or "362" on shaft.

Shafts of con rods "213", "365" and "367" are not machined and are copper plated.

Shaft of con rod "362" is not copper plated and is blank (grey/brown).

Grinding or polishing of shaft or con rod is not permitted.

5.7.2 IGNITION SIGNAL ON CRANKSHAFT

BRMC 2026-27

Fit the template (Rotax 277391) on the crankshaft.

Align the hole in the template for the big end pin with the big end pin of the crankshaft.

The two edges of the signal machining on the crankshaft must be in line (+/- 0.5 mm) with the corresponding edges (MAX or DD2) of the template.

5.7.3 BEARINGS

The below listed, original as supplied by ROTAX bearings are the only bearing allowed.

See pictures for reference below.

Crankshaft main bearing 6206 from FAG.

Must be marked with FAG - Z-579165.11. KL or Z-579165.21. KL

Balance shaft bearings 6302 from SKF.

Marked with code SKF 6302 TN9/C3.

Balance shaft bearings 6005 from FAG.

Marked with code FAG F-801801.6005.

Primary shaft bearings 6204 from FAG.

Marked with code FAG 6204-E-TVH-C3.

For all bearings the mounting direction is free.

5.8 BALANCE SHAFT

Balance shaft and balance gears must be installed.

BRMC 2026-27

125 Micro MAX, 125 Mini MAX, 125 Junior MAX and 125 Senior MAX:

Balance shaft must show casting code 237944, 6237948 or 6237949.

Surface (1) is not machined and must show cast / forged surface.

The minimum weigh of the dry balance shaft must not be lower than: 255 grams.

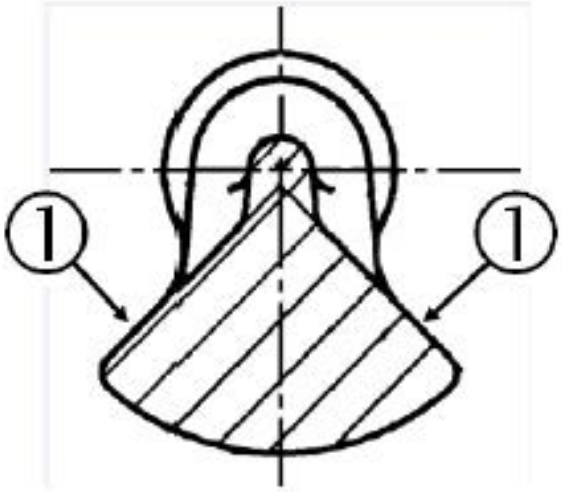

5.8.1 2-SPEED GEARBOX (FOR 125 MAX DD2 ONLY)

Primary shaft with 19 teeth for 1st gear and 24 teeth for 2nd gear.

Idle gear for 1st gear has to have 81 teeth.

Idle gear for 2nd gear has to have 77 teeth.

5.8.2 CRANKCASE

As supplied by the manufacturer.

No grinding/polishing is permitted in the two main transfer passages as well as in the crank area.

Machining maybe evident in the crankcases in the area identified in the picture and in the ignition crank sensor bore area.

125 Junior MAX, 125 Senior MAX and 125 MAX DD2

Only Black coated crankcases are legal to be used.

BRMC 2026-27

125 Micro MAX and 125 Mini MAX

The only crankcases legal to be used for racing in the 125 Micro MAX and 125 Mini MAX categories will be the original machined pick-up flange type with casting codes 6211885 (ignition sensor side) and 6211893 (clutch side).

For 125 Micro MAX, 125 Mini MAX, 125 Junior MAX, 125 Senior MAX and 125 MAX DD2

Ignition distance control gauge (277406) must be inserted in a vertical direction into the bore for the ignition sensor. The gauge must fully touch the stopper surface of the crank case, no gaps must be visible in the facing areas. **This measurement is only valid for original machined pick-up flange type with casting codes 6211885 (ignition sensor side).**

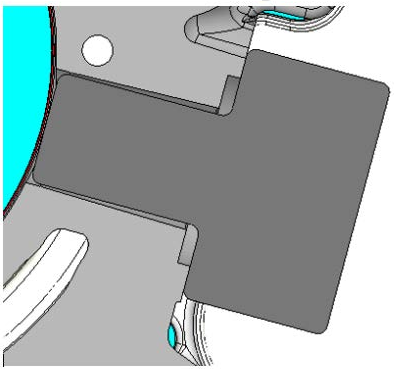

6. TECHNICAL SPECIFICATION OUTSIDE THE ENGINE SEAL FOR ROTAX MAX KART ENGINES

It is the responsibility of the competitor to check his equipment (all components outside the engine seal as mentioned below), to assure that his equipment is conforming to the technical specification below.

6.1 BALANCE DRIVE AND GEAR OIL

125 Micro MAX, 125 Mini MAX,125 Junior MAX and 125 Senior MAX:

Steel balance gears only (minimum width = 8.8 mm) are legal to be used.

Balance gears must be installed and must be aligned according to the instruction in the repair manual.

A minimum volume of 50ml of gear oil must be able to be sampled at all times during the event.

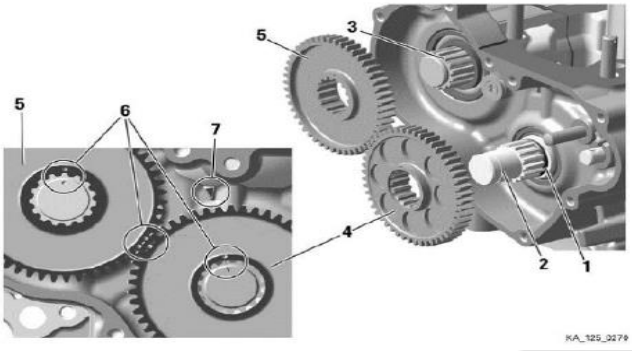

XPS KART GEAR Oil must be used, changing of the gear oil for an alternative brand is not permitted.

The measured oil must be extracted by the competitor or representative via the port for this purpose in a maximum of 1 minute. It is the competitor's responsibility to capture all extracted oil in the provided container; any waste or spillage will not be counted as part of the measurement.

It is permitted to remove the engine from the kart and to tilt it during this process to help drain all the oil through the dedicated port.

125 MAX DD2:

Balance drive gear must be fitted on crank shaft.

Balance gear must be fitted on primary shaft and must be aligned with the balance drive gear according to the instruction in the repair manual.

Version 1:

Fly weight of balance gear must show cast surface

Version 2:

Fly weight of balance gear can show machined surface.

Dimension A (widest part of balance weight) must be either:

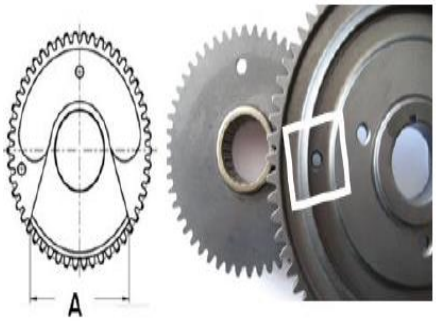

	Length	Tolerance
Dimension A	53.0 mm	+0.50 mm -0.50 mm
Dimension A	57.0 mm	+0.50 mm -0.50 mm

The minimum weight of a dry balance gear including bearing must not be lower than 240 grams

BRMC 2026-27

Version 3:

ROTAX part number 635745 (visible on the gear)

Fly weight of balance gear can show machined surface.

The minimum weight of a dry balance gear including bearing must not be lower than 255.0 grams.

A minimum volume of 100ml of gear oil must be able to be sampled at all times during the event.

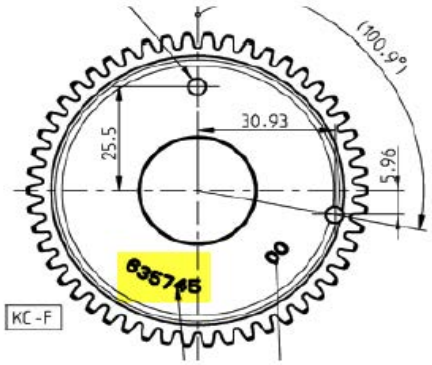

XPS DD2 KART GEAR Oil must be used, changing of the gear oil for an alternative brand is not permitted.

The measured oil must be extracted by the competitor or representative via the port for this purpose in a maximum of 1 minute. It is the competitor's responsibility to capture all extracted oil in the provided container; any waste or spillage will not be counted as part of the measurement. It is permitted to remove the engine from the kart and to tilt it during this process to help drain all the oil through the dedicated port.

6.2 CENTRIFUGAL CLUTCH

6.2.1 COMPONENTS

125 Micro MAX, 125 Mini MAX, 125 Junior MAX and 125 Senior MAX:

Engagement speed of centrifugal clutch at maximum 4.000 rpm (the kart without driver must start to move).

Two versions of clutch (item 1, with and without holes) are legal to be used.

Both versions are marked with the wording "ROTAX".

O-ring (item 2) must be fitted and must assure an appropriate sealing between the clutch drum and the needle/plain bearing.

Two versions of clutch drum (item 3) are legal to be used.

Both versions are marked with the wording "ROTAX".

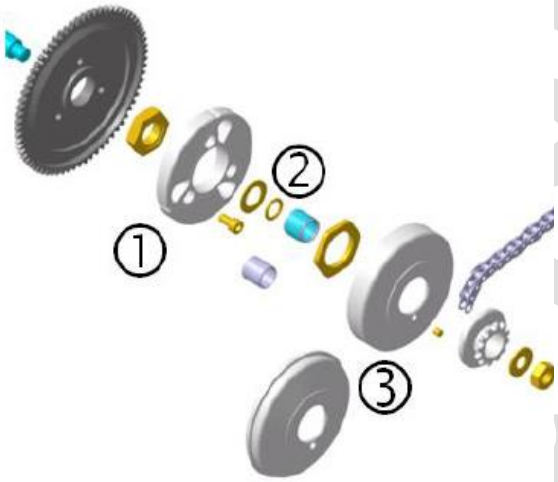

BRMC 26-27

Signs of emission of grease from the needle/plain bearing into the clutch drum may not exceed the picture beside.

Contact area between clutch and clutch drum has to be dry at any time – no substance allowed.

125 MAX DD2:

Engagement speed of centrifugal clutch at maximum 4.000 rpm (the kart without driver must start to move).

Both versions of clutch (item 6, with and without holes) are legal to be used.

O-ring (item 11) must be fitted.

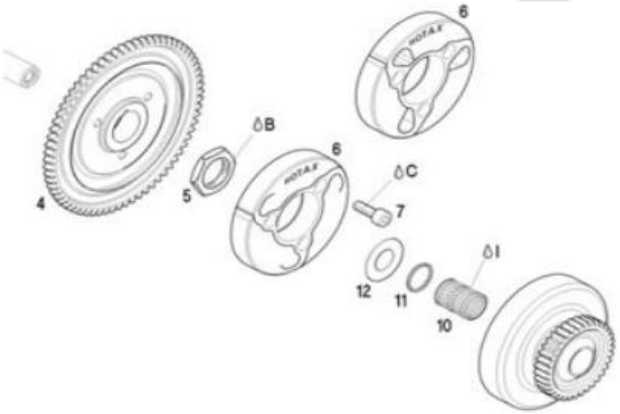

6.2.2 CLUTCH DIMENSIONS

Thickness of clutch shoe (A):

All MAX Engines Minimum = 24.10 mm

Measurement must be done at the 3 open ends of the clutch, 5 - 10 mm from the machined groove (all clutch shoes must be completely closed at measurement - no gap).

Height of clutch (B):

125 Micro MAX, 125 Mini MAX, 125 Junior MAX and 125 Senior MAX:

Minimum = 11.45 mm

125 MAX DD2: Minimum = 14.45 mm

BRMC 2026-27

Clutch drum Outer diameter (C):

Minimum = 89.50 mm

Diameter must be measured with a sliding caliper just beside the radius from the shoulder (not at the open end of the clutch drum).

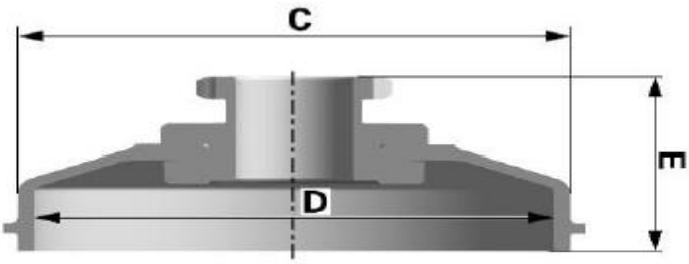

Clutch drum Inner diameter (D):

Maximum = 84.90 mm

Diameter must be measured with a sliding calliper. The measurement must be done in the middle of the clutch drum (in the contact area between clutch and clutch drum).

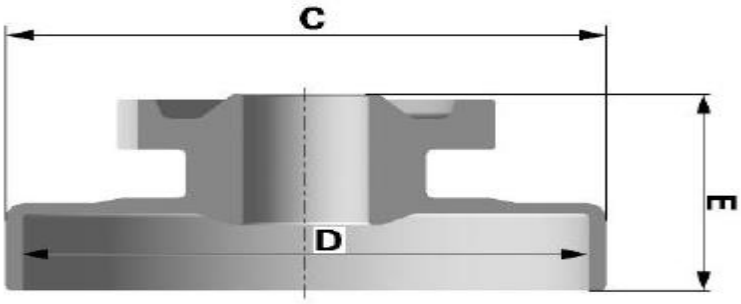

Clutch drum Height (E) with sprocket/primary gear

125 Micro MAX, 125 Mini MAX, 125 Junior MAX, 125 Senior MAX: Minimum = 33.90 mm

125 MAX DD2: Minimum = 39.50 mm

6.3 PRIMARY DRIVE (125 MAX DD2):

Original primary drive gears (4+5) of following gear ratio options must be used only.

Following combinations are legal to be used.

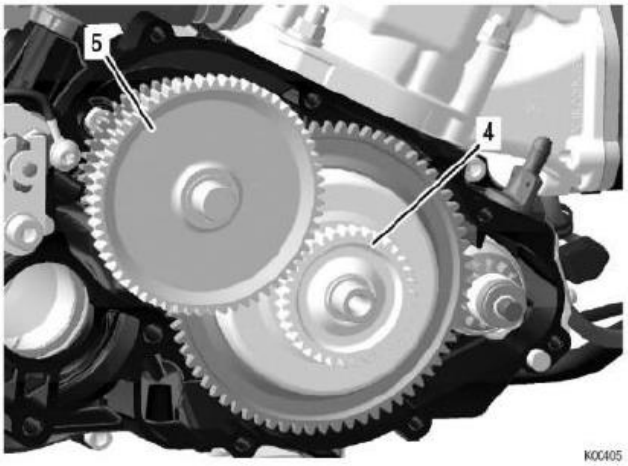

Drive gear	Driven gear
32	65
33	64
34	63
35	62
36	61
37	60
38	59

Note: A specific primary gear ratio may be determined for each race event by a “Bulletin”.

BRMC 2026-27

6.4 GEAR SHIFTING (125 MAX DD2)

The 2-speed gearbox must be operated from the steering wheel via the original Rotax paddle shift system (see illustration).

Cutting the original aluminium shift paddles (30) or adding non-original parts is not permitted. The only exception is the addition of padding or protective covers to the paddles. Mounting the shift paddles (30) on the bottom or top side of the whip (23) is an allowed adjustment.

Optional parts (35-37) can be mounted on the shift paddle (30) in any position.

Bending the aluminium shift paddles to align them to the steering wheel is an allowed adjustment.

The whip (23) offers two connections for the cables (23) on each side for short travel or long travel. Both connections are legal to be used.

To change the connections of the cables to the whip (23) from left to right and right to left is an allowed adjustment.

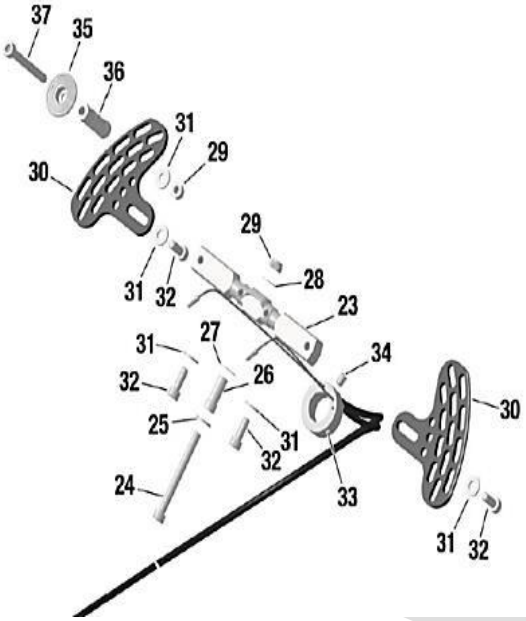

6.5 COMBINATION OF IGNITION SYSTEM, CARBURETOR AND EXHAUST SYSTEM

The combination of components is limited to following specification per engine type.

Component \ MAX Engine	Micro	Mini	Junior	Senior	DD2
Ignition system Dell'orto	✓	✓	✓	✓	✓
Exhaust valve, electronic timed	-	-	-	✓	✓
Carburetor XS	✓	✓	✓	✓	✓
Exhaust system, evo	✓	✓	✓	✓	✓

6.6 EXHAUST VALVE (125 SENIOR MAX AND 125 MAX DD2)

BRMC2026-27

System must be used with all components fitted as shown in the illustration.

The cylinder protection plate (45) must be installed and must have a minimum thickness of 0,08mm with cylinder ID 223933 and 613933.

It is Possible for the cylinder protection plate (45) to show signs of wear or damage.

Bellow (10) must have green colour.

For the "ROTAX RACING" Cylinder ID Codes 413531 and 613934 it is not required to use the cylinder protection plate (45).

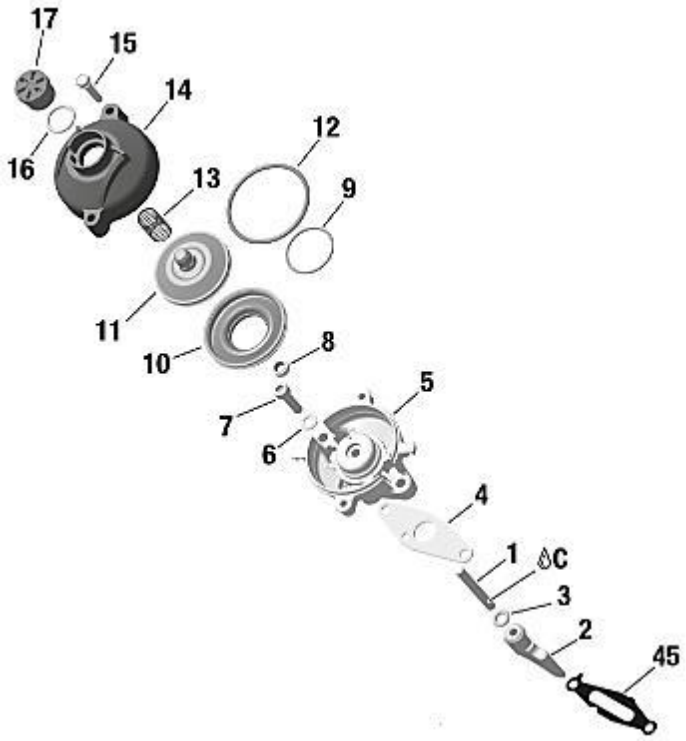

6.6.1 EXHAUST VALVE

Item 2	Length	Tolerance
Exhaust Valve	36.5 mm	+0.20 mm
		-0.30 mm
Width of Collar	4.8 mm	+0.30 mm
		-0.30 mm

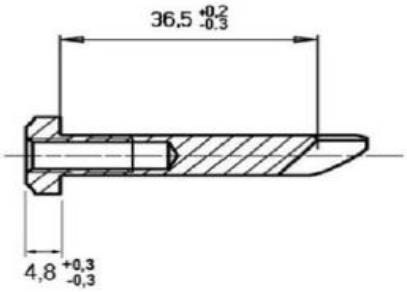

Uncoated or as supplied hard anodized exhaust valve are both legal for use. Strictly no Modifications are allowed.

6.6.2 DISTANCE OF EXHAUST VALVE FLANGE AT CYLINDER TO PISTON, CYLINDER ID CODE 223993 AND 613933.

Turn crankshaft until the piston just closes the exhaust port. Insert the exhaust valve gauge (Rotax 277030) as shown in the picture until it stops at the flange.

At the contact area between exhaust valve gauge (Rotax 277030) and the flange of the cylinder, a feeler gauge 0.05 mm may not fit between the gauge and the flange.

The measurement must be performed outside the exhaust valve contact area indicated in red.

6.6.3 DISTANCE OF EXHAUST VALVE FLANGE AT CYLINDER TO PISTON, CYLINDER ID CODE 413531 AND 613934

Turn crankshaft until the piston just closes the exhaust port. Insert the exhaust valve gauge (Rotax 277032) as shown in the picture until it stops at the flange.

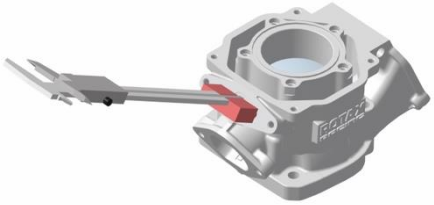

Measure the distance from the end of the gauge to the stopper surface of the cylinder.

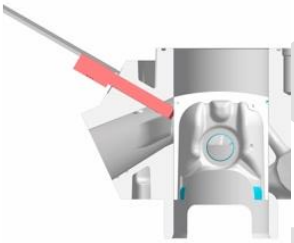

This measurement must not exceed 25.0mm.

Measurement has to be done on both sides up and down, turn the template by 180 degrees.

6.6.4 IMPULSE NOZZLE:

BRMC 2026-27

Fitting an original impulse nozzle (1) into the pressure hose is an allowed adjustment.

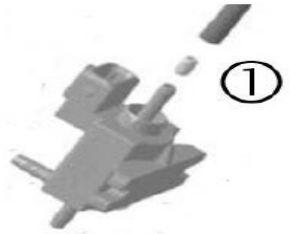

The direction of the impulse nozzle inside the pressure hose is free.

6.6.5 EXHAUST VALVE SETTINGS

The electronic timed exhaust valve offers two different settings (A or B) for the opening of the exhaust valve.

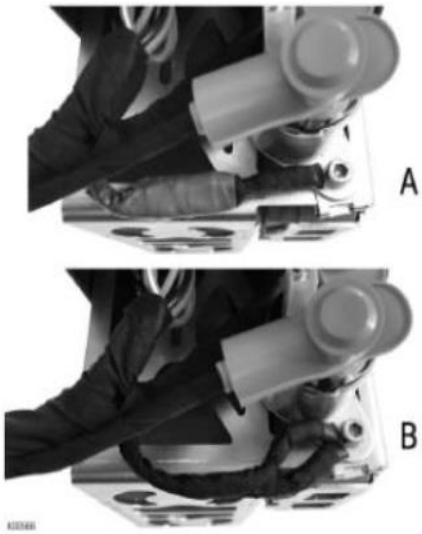

(A)…additional ground cable not connected

(B)…additional ground cable connected

Both settings are legal to be used.

6.7 IGNITION SYSTEM

Digital battery ignition system, variable ignition timing, no adjustments possible.

6.7.1 SPARK PLUG

125 Micro MAX and 125 Mini MAX:

Spark plug: NGK GR8DI or NGK GR9DI

Electrode gap (maximum): Pin gauge 1.20 mm must not fit in between the two electrodes.

125 Junior MAX, 125 Senior MAX:

Spark plug: NGK GR8DI or NGK GR9DI

Electrode gap (maximum): Pin gauge 1.00 mm must not fit in between the two electrodes.

For the 125 MAX DD2:

Spark plug: NGK GR8DI or NGK GR9DI

Electrode gap (maximum): Pin gauge 1.00 mm must not fit in between the two electrodes.

For all categories: It is only allowed to use the NGK GR8DI or NGK GR9DI as identified in the picture below on the left side and marked by the green circle.

The aftermarket part marked red circle with the extended electrode is strictly forbidden for use.

BRMC 2026-27

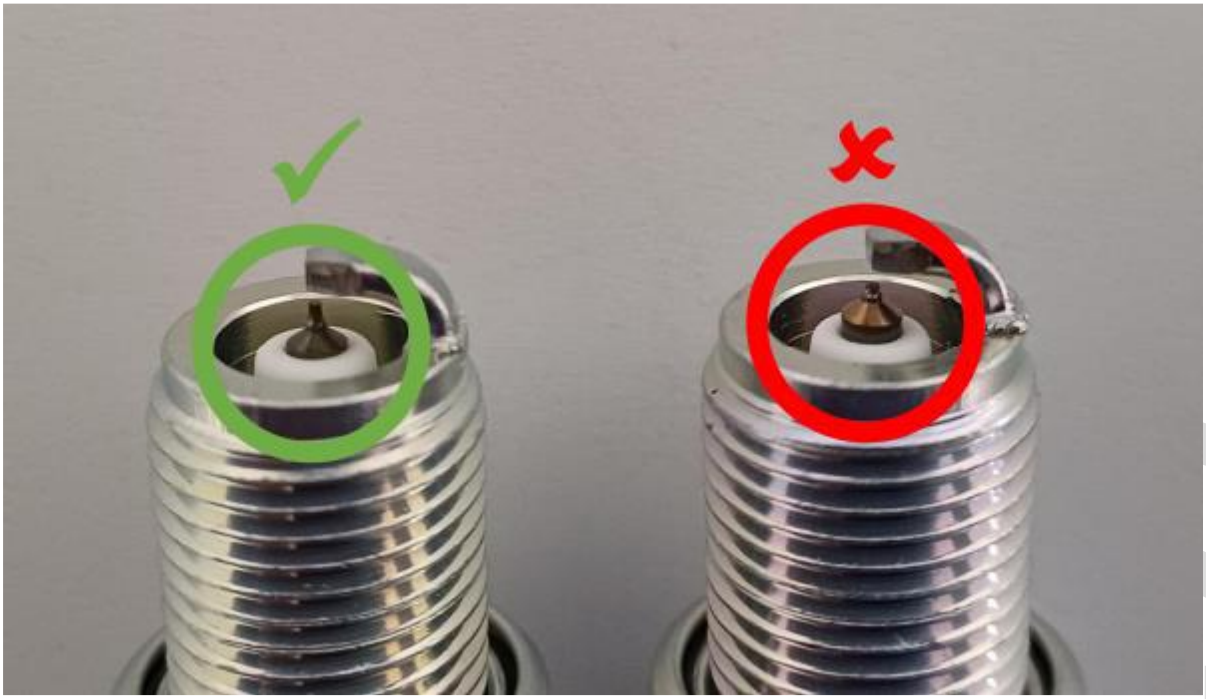

6.7.2 SPARK PLUG CAPS

Two versions of spark plug caps are legal to be used.

Red, marked NGK or ROTAX

Version 1

Version 2

6.7.3 PICK-UP

The marking of the pick-up must show the following numbers in the first line 029600-0710. A steel ball (diameter 3-5 mm) placed on circular surface of the sensor must stay in the center of the circular surface.

The length from the sealing face / surface to the end of the pick-up as defined in the picture (A) must not exceed 26.3mm. Measurement must be completed with gaskets removed.

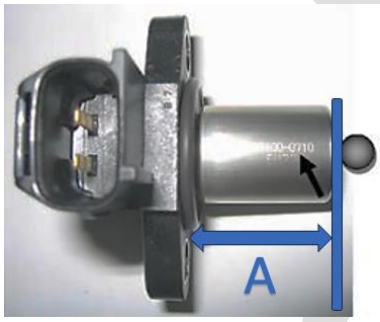

BRMC 2026-27

Signs of grinding or removal of material on the sealing face is strictly forbidden.

Mounting the pick-up to the crankcase with a (1) gasket additional (431500) to the original rubber sealing ring of the pick-up, **is mandatory** for all engines not using the original machined pick-up flange type with casting codes 6211885 (ignition sensor side).

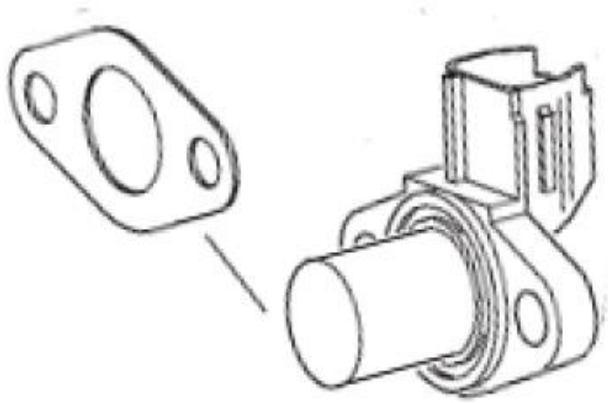

Additional gasket, Rotax 431500, used must have a minimum thickness greater than = 0.5mm.

Maximum two gaskets (Rotax 431500) are allowed to be fitted.

Fitting position of the additional gasket(s):

Crankcase – rubber sealing ring – additional gasket(s) – pick-up.

Note: It is not necessary to install any additional gasket/s with the exception of the rubber sealing ring on original machined pick-up flange type with casting codes 6211885 (ignition sensor side) for the pick-up sensor.

6.7.4 IGNITION SYSTEM

Dellorto ignition system is legal to be used only.

Race officials may request at any time that the competitor replaces the electronic box (ECU) with another unit provided by the race administration.

The visual appearance of the ignition coil must be identical with the pictures.

Ignition coil must show 2 pins at the terminal.

The ignition coil is still legal to be used also if one or both stickers are faded or removed.

Minimum length of the high-tension cable of the ignition coil is 210 mm (from outlet of ignition coil to outlet of spark plug connector = visible length of cable).

Ignition coil (same for all engines) with separate electronic box (ECU, specific for every engine).

Ignition coil and ECU (and magnet valve, for 125 Senior MAX and 125 MAX DD2 only) must be fitted with all components according to the illustrations below.

BRMC 2026-1

125 Micro MAX, 125 Mini MAX, 125 Junior MAX and 125 Senior MAX:

In case the mounting bracket (125 Micro MAX, 125 Mini Max, 125 Junior MAX and 125 Senior MAX only) is in conflict with a chassis component, the additions of 2 spacers, one per mounting hole, with a maximum thickness of 20 mm between the mounting bracket and the gearbox cover is allowed.

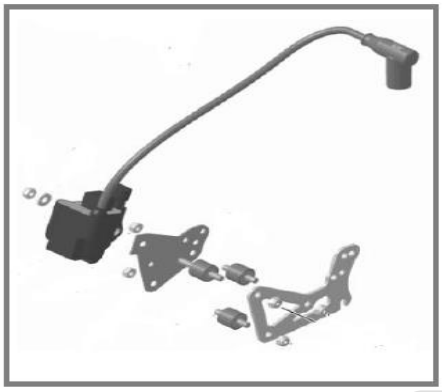

125 DD2 MAX / Masters: The electrical contact at the shift assembly must be connected, as per the picture below.

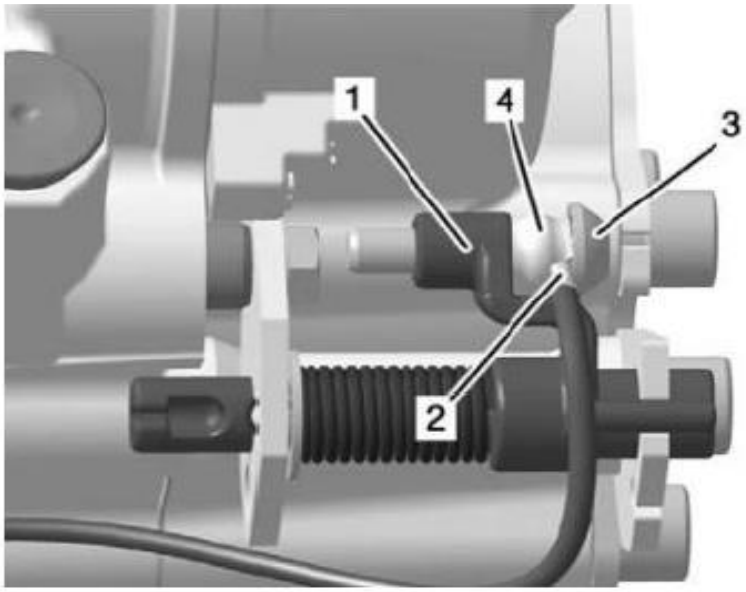

125 MAX DD2:

BRMC 2026-27

6.7.5 ECU

The electronic control unit (ECU) is labelled with stickers and is still legal also if the sticker is unreadable or disappeared.

125 Micro MAX: “666815”

125 Mini MAX: “666818”

125 Junior MAX: “666813”

125 Senior MAX: “666815”

125 MAX DD2: “666816”

The ECU must be checked with the ECU tester (Rotax 276230) according to following procedure.

Disconnect engine cable harness from ECU.

Connect ECU tester cable harness to ECU.

Connect energy cable of ECU tester cable harness with the charging connector of engine cable harness.

At every connection with the battery the software version of the ECU tester will be indicated on the display for approx. 2 seconds.

The software version indicated on the display must be 2V00.

Start the test by pressing the button "✓" on the ECU tester.

After approx. 3 second the type of ECU ① that is actually tested will be indicated in the second line of the display.

After approx. 30 seconds the result ② of the test will be indicated in the first line of the display.

The ECU tester must indicate following results:

125 Micro MAX category

① 666815MAX

② !! Test OK !!

125 Mini MAX category

① 666818MINIMAX

② !! Test OK !!

125 Junior MAX category

① 666813JNRMAX

② !! Test OK !!

125 Senior MAX category

① 666815MAX

② !! Test OK !!

125 MAX DD2 category

① 666816MAXDD2

② !! Test OK !!

6.8 BATTERY, BATTERY FIXATION AND WIRING HARNESS

BRMC 2026-27

Original batteries with following specification only are legal to be used. YUASA YT7B-BS (with and without Rotax branding)

ROTAX RX7-12B or RX7-12L or ROTAX LiFePo4 (lithium iron phosphate type)

Battery must be fitted with the original battery clamp and battery cover (according to illustration) and must be fixed to the chassis with both clamps (all 4 screws). Battery clamp with or without cable support is legal for use.

Battery clamp must be mounted on the left side of the Chassis, next to the seat.

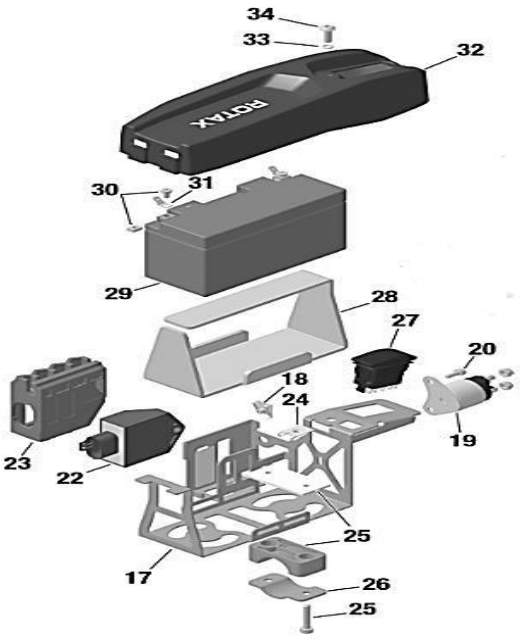

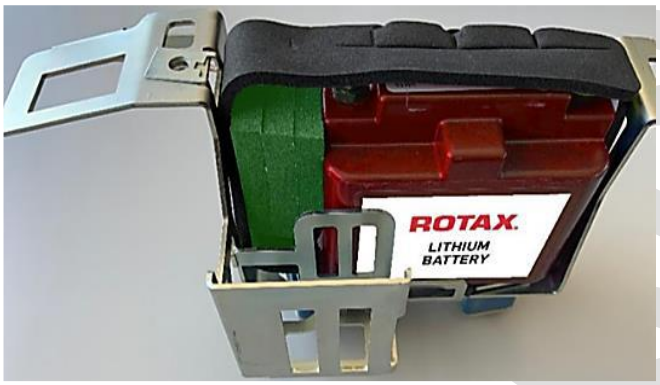

Two versions of the wire harness are allowed to be used. The differences between the two versions can easily be identified by the key points listed.

	Wiring Harness (666 835)	Wiring Harness (666 836)
ECU Connector		

Charging Connector

Solenoid Connector

6.9 INTAKE SILENCER

125 Micro MAX, 125 Mini MAX, 125 Junior MAX and 125 Senior MAX

BRMC 2026-27

Intake silencer with integrated, washable air filter must be used with all parts as shown at the illustration and has to be mounted on the support bracket with two screws (in dry and wet condition).

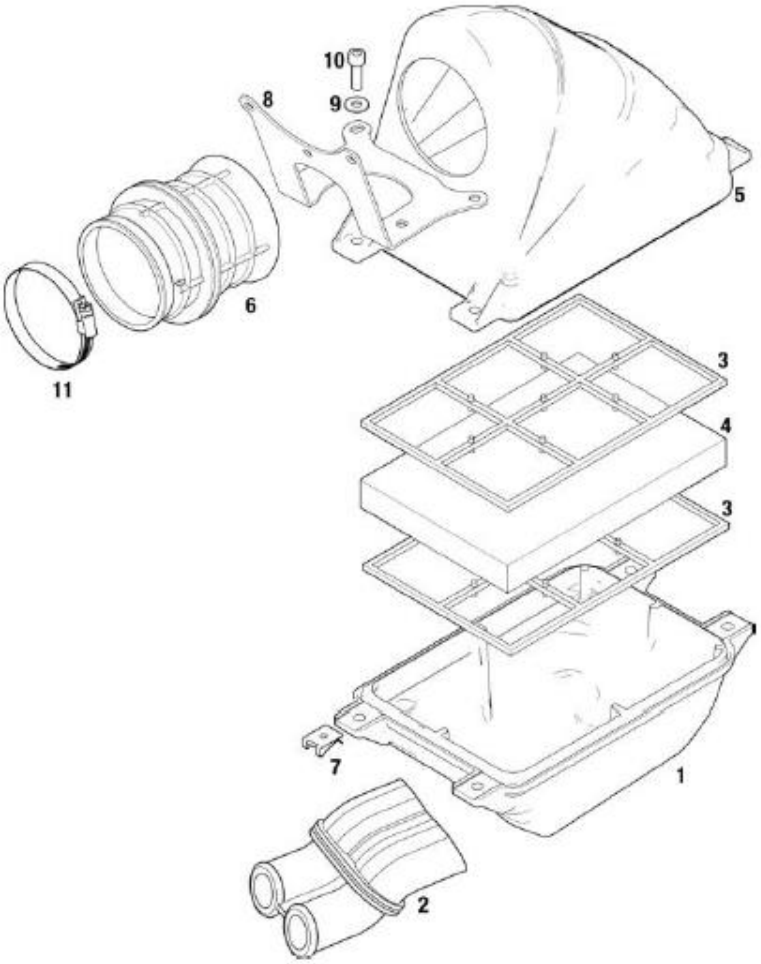

Intake silencer tube (pos 2) and carburettor socket (pos 6) are marked with the wording "ROTAX".

Intake silencer case bottom is marked on the inside with “225015”.

Intake silencer case, top is marked on the inside with “225025”.

Only one version of original air filter (Pos4) is legal to be used marked with “Twin Air” (green/dark green). (see examples).

Air filter (pos 4) must be installed as shown in the illustration between the two holders (pos 3) and must cover the complete area of the intake silencer case bottom (pos1).

BRMC 2026-27

During wet condition, it is not allowed to attach anything to the air box to protect the air inlet from water spray.

125 MAX DD2:

Intake silencer with integrated washable air filter as shown in illustration.

The intake silencer case (Pos 1) is marked on the inside with “225012” (4 clips) or “225013” (5 clips).

The intake silencer cover (Pos 2) is marked on the inside with “225022” (4 clips) or “225023” (5 clips).

Two versions of air filters (Pos 3) are legal to be used.

Version 1, with integrated steel frame.

Version 2, with separate plastic frame (Pos 4).

The air filter must be assembled between the intake silencer case and the intake silencer cover that the whole area of the intake silencer case is covered.

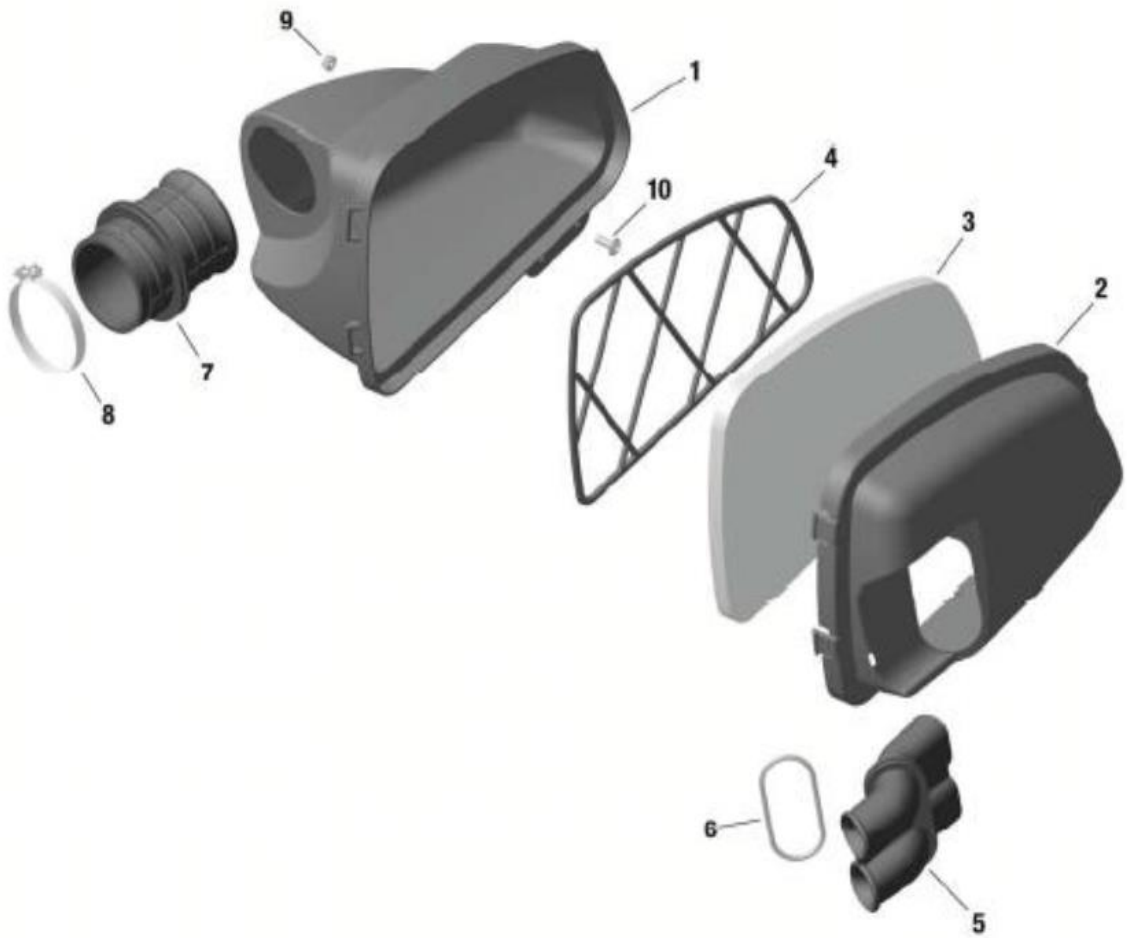

At intake silencer cover (Pos. 2, Rotax 225022), it is mandatory to fit the O-ring (pos. 6) on the intake silencer tube (Pos. 5). Intake silencer tube (Pos 5) and carburettor socket (Pos 7) are marked with the wording "ROTAX".

Sealing the top of the intake silencer using adhesive tape is an allowed modification. During wet condition, it is not allowed to attach anything to the air box to protect the air inlet from water spray.

6.10 CARBURETTOR

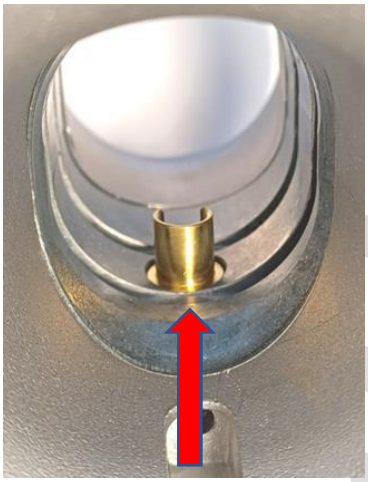

Dellorto carburetor, housing must show the cast wording “VHSB 34”

Carburetor housing is stamped with “XS”.

The lower entrance of the inlet bore of the carburetor must show a cast surface (See picture for reference, strictly no machining allowed in the area indicated by the red arrow).

Control machining maybe evident in and through the center of the venturi bore and on the edges of the venturi where it meets the cast body.

Optional item ROTAX main jet cup is legal to be used.

This part optionally replaces the part 261550. Optional carburetor plug screw marked "ROTAX" (ROTAX part no. 261 030) is legal to be used.

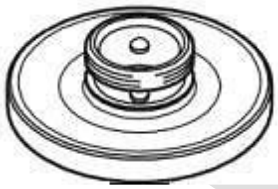

The two vent fittings must be connected with the original air vent hose min 155 mm (Rotax 260260). The location of the opening has to be placed at the rear side of the carburetor.

Settings of the carburetor adjustment screws (idle and idle air) are free.

The position of the jet needle is free.

All jets must be correctly seated and securely fitted at any time (tightened)!

A minimum required size of main jet may be determined for each race event by a “Bulletin”.

The complete inlet bore of the carburetor housing must show cast surface.

The venturi hole of the carburetor insert can show signs of a CNC control machining.

Carburettor insert maybe used with 1 or 2 gaskets placed between the insert and the body of the carburettor.

Carburetor can be used with and without fuel sieve in the carburetor housing.

BRMC 2026-27

The height of the two arms of the float lever must be within the slot of the carburetor gauge (Rotax 277400) by their normal weight measured at carburetor housing without gasket in reverse upright position.

Needle valve assembly stamped "150"

A pin gauge measuring 1.56mm may not pass through the central bore, No pressure may be applied.

Needle of needle valve marked with diamond symbol ”INC" only.

Start jet is stamped with the digits “60”.

Any Dellorto main jet number even if not offered from Rotax is legal to be used.

Carburetor slide shows digits “45” in casting.

Jet needle must be stamped with “K57”.

Two floats marked "4.0 gr" are legal to be used only

Needle jet Stamped with “DP267”

	Length	Tolerance
Total Length	51.0 mm	+0.50 mm -0.50 mm

	Length	Tolerance
Bottom Section	33.0 mm	+0.45 mm -0.45 mm

BMC 2026-27

	Diameter	Tolerance
Top Bore	26.7 mm	+0.10 mm -0.10 mm

Idle jet

Idle jet has to be stamped with 60.

Plug gauge 0.65 mm may not pass through the central bore, No pressure may be applied.

For this test, the pin gauge shall be sufficiently extended from the holder to ensure that the plastic holder does not interfere with the measurement.

(Use jet gauge set Rotax part no. 281 920).

Idle emulsion tube

Idle emulsion tube has to be stamped with 45.

Plug gauge 0.50 mm may not pass through the central bore, No pressure may be applied.

For this test, the pin gauge shall be sufficiently extended from the holder to ensure that the plastic holder does not interfere with the measurement (Use jet gauge set Rotax part no. 281 920)

Atomizer

Remove atomizer from carburettor body by means of venturi tool set (Rotax part no. 676 034)

	Length	Tolerance
Atomizer	23.75 mm	+0.35 mm -0.35 mm

BRMC 2026-27

	Cylindrical Length	Tolerance
Atomizer	15.75 mm	+0.25 mm -0.25 mm

	Cutaway Dimension	Tolerance
Atomizer	5.8 mm	+0.30 mm -0.30 mm

	Cross Bore Dimension	Tolerance
Atomizer	5.0 mm	+0.15 mm -0.15 mm

Carburetor insert must show stamping “12.5”

BRMC 26-27

Angular bore of carburetor inserts

Plug gauge 0.60 mm may not pass through the central bore, No pressure may be applied.

For this test, the pin gauge shall be sufficiently extended from the holder to ensure that the plastic holder does not interfere with the measurement.

(Use jet gauge set Rotax part no. 281 920).

Vertical bore of carburetor inserts

Plug gauge 1.30 mm may not pass through the central bore, No pressure may be applied.

For this test, the pin gauge shall be sufficiently extended from the holder to ensure that the plastic holder does not interfere with the measurement.

(Use jet gauge set Rotax part no. 281 920).

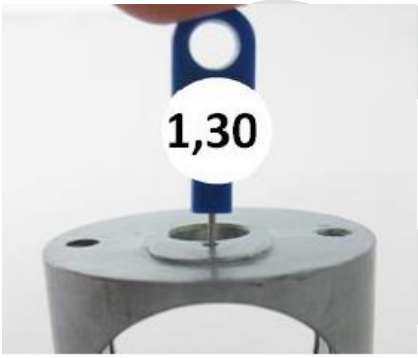

125 Micro MAX and Mini MAX:

The throttle body restrictor must be fully inserted into the carburettor body and in the correct orientation at all times.

(See picture for reference).

ROTAX part number: 267536

No modifications are allowed, the ribbed surface on the inlet is to help ensure dimensions have not been modified.

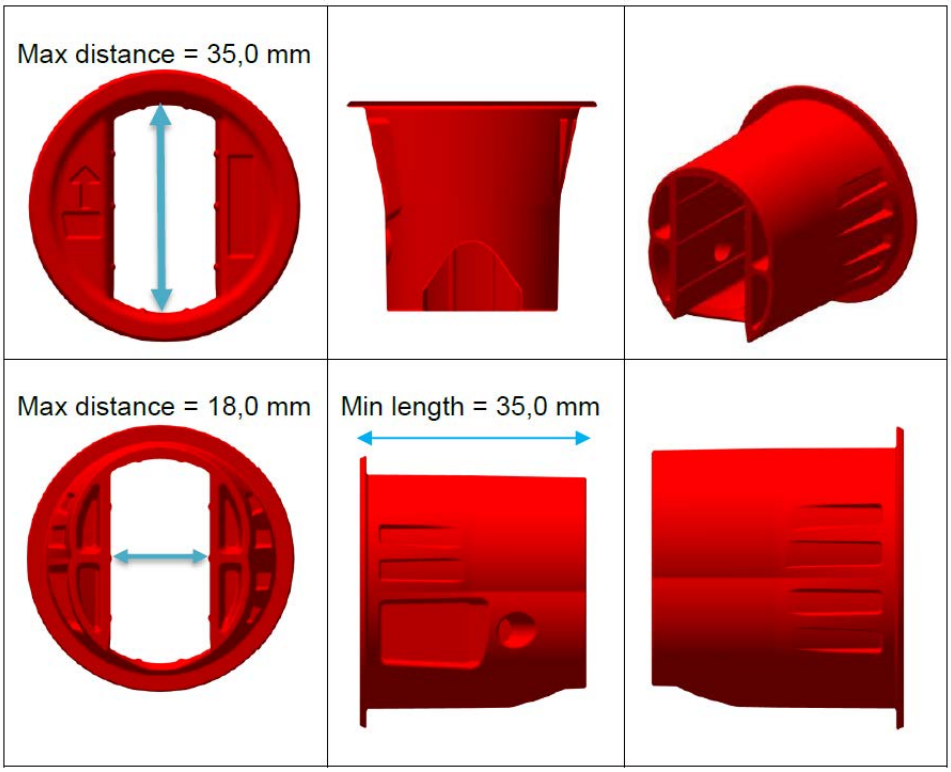

Picture 1

6.11 FUEL PUMP, FUEL FILTER

MIKUNI diaphragm pump, (see picture left) must be used in the 125 Micro MAX, 125 Mini MAX and 125 Junior MAX categories.

For 125 Senior MAX and 125 MAX DD2 (including masters) it is permitted to use the MIKUNI or Dellorto diaphragm pump (see picture right).

It is advised and permitted to use fuel hose clamps on all fuel and pulse lines to provide a secure seal. It is permitted to drill a new hole to mount the Dellorto pump onto the existing brackets.

125 Micro MAX, 125 Mini MAX, 125 Junior MAX and 125 Senior MAX:

Fuel pump must be mounted on the bottom side of the support bracket for the intake silencer (left illustration).

125 MAX DD2:

Fuel pump must be mounted on the support bracket ROTAX part number 651063 651055 or 651056, attached to the clutch cover (right illustration).

Mounting the fuel pump with the two original rubber buffers to the chassis is an allowed option. In this case the fuel pump must be mounted below the inlet center line of the carburetor.

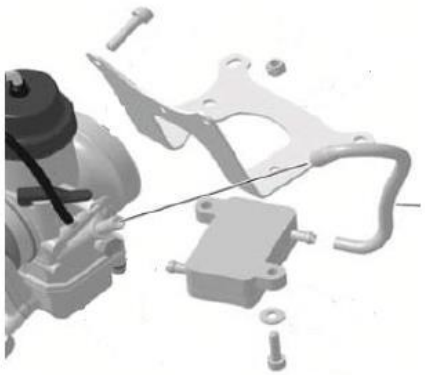

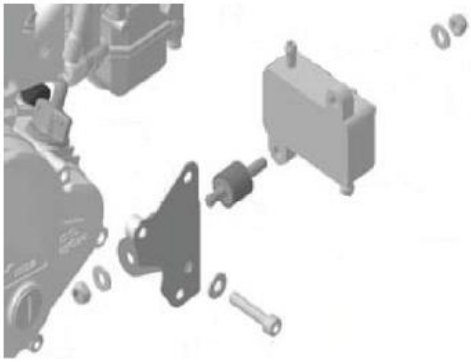

6.12 FUEL FILTER

A fuel filter is mandatory to be installed (see pictures).

The fuel filter must be mounted between the fuel tank and the fuel pump.

Removing plastic molding marks from the inlet and outlet of the fuel filter is allowed.

Except the fuel line, the fuel pump and the original fuel filter no additional parts are legal to be mounted between fuel tank and carburetor.

6.13 RADIATOR

The removal of the thermostat from the cylinder head cover is an allowed modification.

Radiator must be mounted with all components as shown in the respective illustration.

To apply tape (neutral tape without advertising only) around the radiator is an allowed modification to control the air flow through the radiator.

Tape may not be removed from the radiator during operation on the track.

Any other non-original device to control the air flow through the radiator is prohibited.

BRMC 2026-27

The dimensions of the radiators are for reference purposes only.

125 Micro MAX and 125 Mini MAX:

The radiator must be mounted on the right side of the engine

Cooling area:

Height:	280 – 300 mm
Width:	58 – 62 mm
Thickness of radiator:	30 – 34 mm

To remove the original flap is an allowed modification.

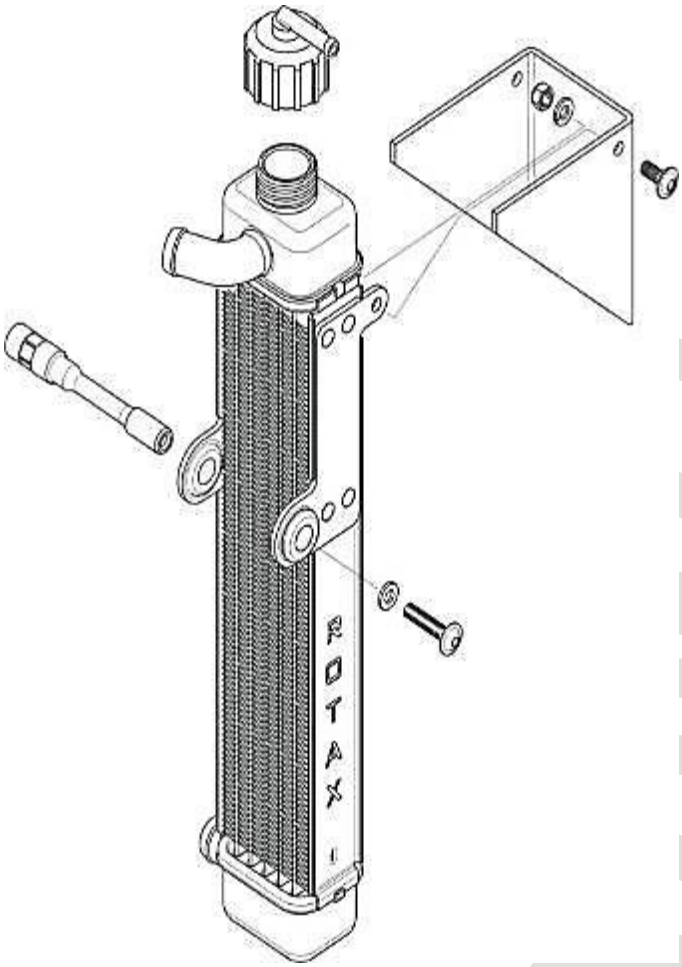

125 Junior MAX and 125 Senior MAX:

The radiator must be mounted on the right side of the engine.

Three different versions as shown in the illustrations are legal to be used.

Cooling area:

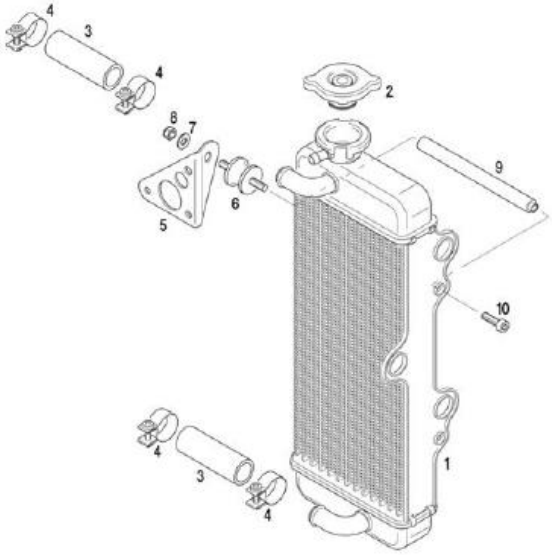

Height: 290 mm

Width: 133 mm

Thickness of radiator: 32 mm

Radiator must be stamped on the side with the wording “ROTAX”.

To remove the original flap is an allowed modification

125 MAX DD2:

The radiator has to be mounted on the left side of the driver seat.

The highest point of the radiator with cap may not be higher than 400 mm above the main tube of the kart chassis.

Cooling area:

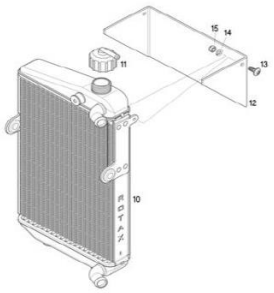

Height: 290 mm

Width: 196 mm

Thickness of radiator: 34 mm

To remove the original flap is an allowed modification.

6.14 ENGINE COOLANT

Plain water without any additives must be used.

6.15 EXHAUST SOCKET (RESTRICTOR)

BRMC 2026-27

125 Micro MAX and 125 Mini MAX :

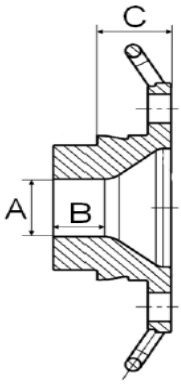

Just exhaust sockets with gasket ring are legal to be used.

The gasket ring must be as supplied. A complete ring with no splits, breaks or excessive wear.

Diameter (A) must apply for a length (B) of at least 12 mm.

Maximum inner diameter (A) of exhaust sockets is:

125 Micro MAX: 18.20 mm (Rotax part no. 273 192)

125 Mini MAX: 22.10 mm (Rotax part no. 273 196)

The measurement (C) must be at least 18.5 mm.

Note: It is the competitor's responsibility to ensure compliance with these measurements!

The internal profile of the exhaust socket has to be checked with the template, Rotax 277 405.

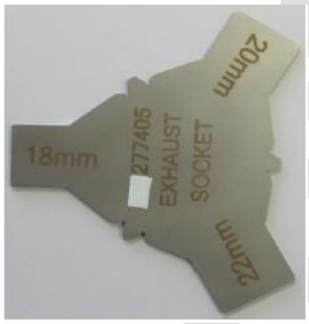

Fit the template (**125 Micro MAX** "18 mm", **125 Mini MAX** "22 mm") as far as possible into the exhaust socket (without gasket, carbon deposits removed). There has to be a constant crack light between the profile of the exhaust socket and the profile of the template.

125 Junior MAX, 125 Senior MAX, 125 MAX DD2:

Only Rotax part no. 273 190 is allowed to be used.

The gasket ring must be as supplied. A complete ring with no splits, breaks or excessive wear.

The measurement (C) must be at least 15.5 mm.

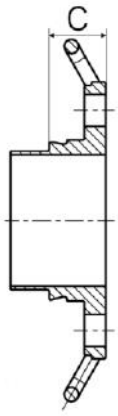

6.16 EXHAUST SYSTEM

BRMC 2026-27

The use of a minimum of 2 pieces and a maximum 4 pieces of original Rotax exhaust springs, to fix the exhaust system to the cylinder is allowed.

The use of a minimum of 2 pieces and a maximum 4 pieces of original Rotax exhaust springs, to fix the exhaust system to the silencer is allowed.

To use a “safety wire” to fix the exhaust system to the exhaust socket is not allowed.

Original exhaust system as supplied by Rotax is mandatory to be used for the relevant class.

Welding at the exhaust system is only allowed in the case of a repair. Only repairs that return the components to its original shape or form are allowed.

Allowed modifications on the original exhaust systems are:

Replacing the original rivets of the silencer end cap by 4 mm metric screws and corresponding locking nuts. The 3 x fixations (rivets, bolts and locking nuts) must be always secured tight to ensure a sealing between the perforated tube and exhaust system. The perforated tube must be fully inserted into the exhaust system (see right picture for reference) External protrusion of the outer sealing ring of the perforated tube is forbidden. (Indicated by the red arrow)

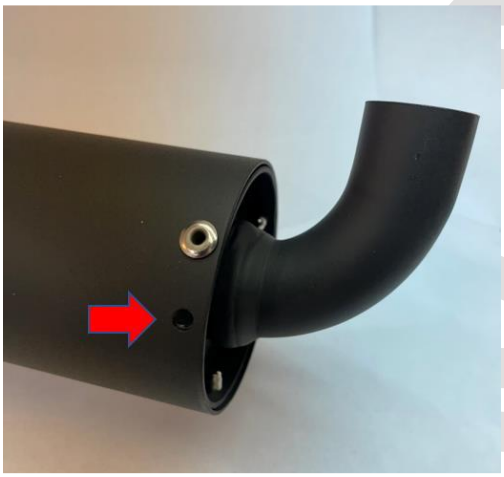

- If the event requires the Exhaust / Perforated tube to be sealed, the seal must be passed through a 4th hole (maximum 4mm diameter). The hole must be in a position that avoids the leaking of exhaust gasses as indicated in the picture on the right. The perforated tube must be always secured tightly to the exhaust at 3 points.
- Replacing the isolating mat in the silencer by one new original isolating mat by original Rotax spares parts. The mat must be installed as intended by wrapping it fully around the complete length of the perforated tube.

125 Micro MAX	ROTAX part number 297982
125 Mini MAX	**ROTAX part number 297985**
125 JNR MAX	ROTAX part number 297982
125 SNR MAX	ROTAX part number 297982
125 DD2 MAX	ROTAX part number 297982

Note

For Post-race technical scrutineering checks on the exhaust isolating mat, only the used weight is to be controlled.

BRMC 2026-27

The exhaust isolating mat new size and weight specifications can only be applied for pre-race / event technical checks against new material prior to installation and sealing of the exhaust system, if specified by the event /series organizer.

- Welding a socket (in a distance of 50-80 mm from the ball joint) on the top of the exhaust system for measuring the exhaust gas temperature.
- Addition extra elements after the original silencer for further noise reduction.
- Additional to the standard isolation mat a steel isolation mat (Rotax part no. 297 983) with the square dimension of 165 +10 mm is legal for use in the JNR / SNR and DD2 category's only (not mandatory) to be assembled underneath the standard isolation mat according to the illustration.
- Clamp (1) must be fitted at a distance of 18+/-2mm, measured from the end of the tube. Clamp (2) must be fitted at the end area of the steel isolation mat.
- The measurement 10-12 mm from the end of the perforated tube to the beginning of the steel isolating mat is a specification for assembly purpose only!
- Both clamps (1 and 2) are mandatory to be fitted and tightened.

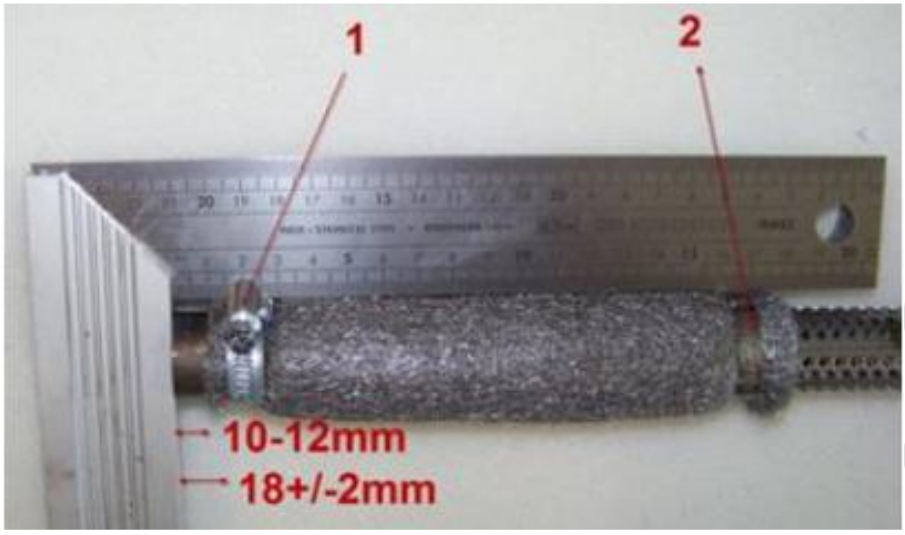

Exhaust System – Repairs and Damage - Permitted Repairs

Re-welding of the exhaust system is permitted subject to the following limitations:

On any round section, repairs must not exceed 50% of the section's diameter.

On any non-round section, repairs must not exceed 150mm in length.

Damage and Eligibility

The presence of damage to any area of the exhaust system may render the component ineligible at the discretion of the Chief Scrutineer.

Any single area of damage exceeding 65mm x 65mm in surface area and/or 10mm in depth will automatically render the exhaust ineligible for competition.

Only repairs that return the components to its original shape or form are allowed.

BRMC 2026-27

Deliberate manipulation of the exhaust system is strictly forbidden.

6.17 125 MICRO MAX:

A specific Exhaust system has to be used for the 125 Micro MAX engine.

The Exhaust external body is a common component to Mini MAX, but with alternative internal components (Inserts).

The silencer must be mounted in a position where the direction of the 90° elbow outlet (direction of the hot exhaust gasses) does not harm any component of the chassis.

The exhaust must be mounted and secured in such a way to ensure a full sealing around the exhaust socket and the gasket ring.

The measurements in the diagram below are as follows:

(a) 580 mm +/- 5mm

(b) 299 mm +/- 5mm

(c) 42 mm +/- 3mm

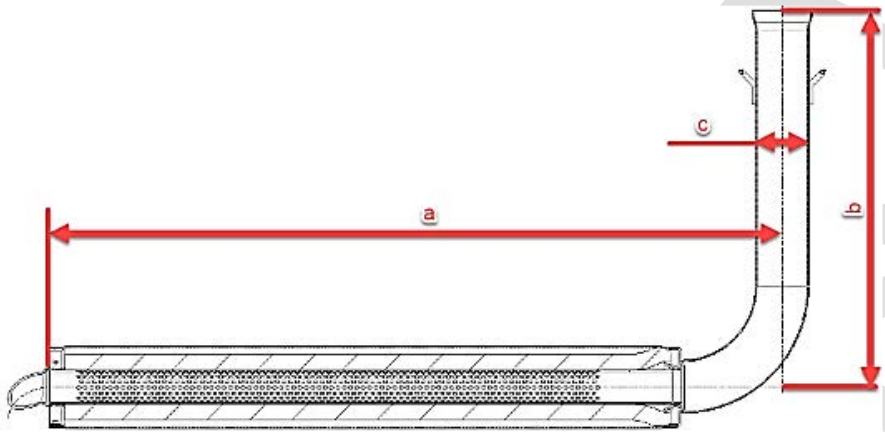

A solid flat plate measuring 28.0mm diameter and 1.5mm thick **must not** pass through Section "A" and

A steel ball with a 26.0mm diameter must be able pass through Section "A" in the below diagram from the inlet and through the 90-degree elbow completely.

All exhaust gases must pass through Section "A" at all times.

(Internal exhaust components must first be removed)

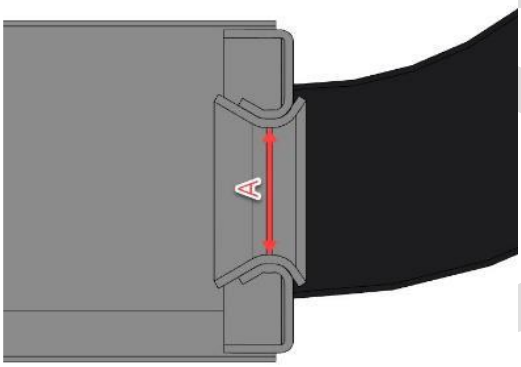

The inner measurement of the exhaust system silencer end (a) in the below diagram must be a maximum of 63.0 mm.

Note: This is not a measurement of the perforated tube

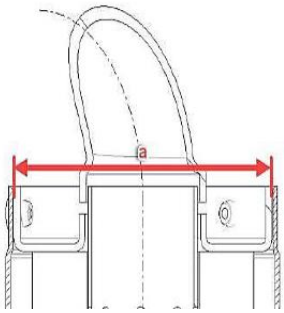

The Exhaust must be installed firmly to the chassis using a rigid mount/s.

The Exhaust must be mounted to the rigid mount/s using 2 ROTAX silent blocks.

(Part 660920 and or 260657 allowed).

The deflection of the 2 silent blocks is the only Exhaust movement allowed.

The Exhaust must be mounted in a neutral position with no stress on the 2 silent blocks.

125 Micro MAX Perforated tube

The measurements in the diagram below are as follows:

(a) at least 498 mm

(b) minimum outside diameter of 61mm

(c) maximum outside diameter of 26mm

(d) minimum length 63mm

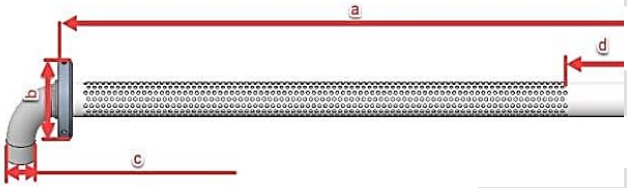

The measurements in the diagram to the right is as follows:

(a) minimum outside diameter of 26.0mm

The only legal Isolation matting for 125 Micro MAX is:

	Measurement	Tolerance
New Size Minimum	480 x 270 mm	+10 mm -10 mm
New Weight	207 Gram	+31 Gram

BRMC 2026-27

		-31 Gram
Used Weight (old)	245 Gram	+105 Gram -105 Gram

NOTE:

The only exhaust system allowed for racing in the 125 Micro and 125 Mini MAX category's is the MY2020 version.

The exhaust has 3 clear visual differences to identify the MY2020 version.

1. Exhaust hooks

2. Connecting socket / ball joint connect at manifold

3. Wall thickness of the exhaust system is 1.0mm (older exhaust system which is not allowed for racing has a wall thickness of 1.5mm)

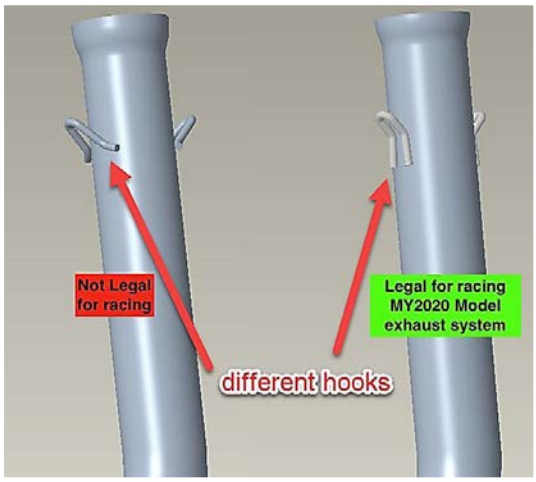

6.18 125 MINI MAX:

A specific Exhaust system has to be used for the 125 Mini MAX engine.

The Exhaust external body is a common component to Micro MAX but with alternative internal components.

The silencer must be mounted in a position where the direction of the 90° elbow outlet (direction of the hot exhaust gasses) does not harm any component of the chassis.

The exhaust must be mounted and secured in such a way to ensure a full sealing around the exhaust socket and the gasket ring.

The measurements in the diagram below are as follows:

(a) 580 mm +/- 5mm

(b) 299 mm +/- 5mm

(c) 42 mm +/- 3mm

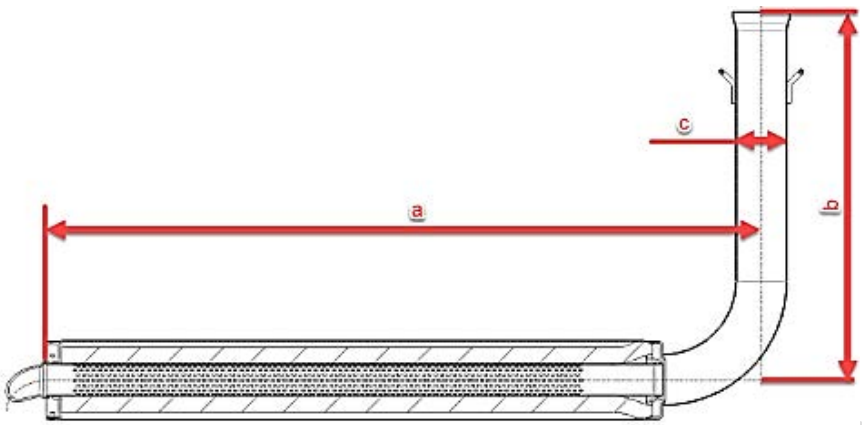

A solid flat plate measuring 28.0mm diameter and 1.5mm thick **must not** pass through Section "A" and a steel ball with 26.0mm diameter must be able pass through Section "A" in the below diagram from the inlet and through the 90-degree elbow completely.

All exhaust gases must pass through Section "A" at all times.

(Internal exhaust components must first be removed)

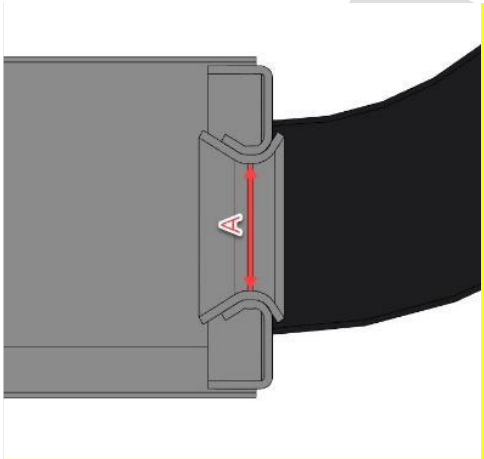

The inner measurement of the exhaust system silencer end (a) in the below diagram must be a maximum of 63.0 mm.

Note: This is not a measurement of the perforated tube

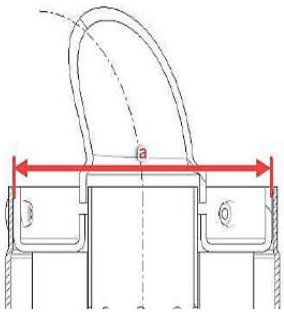

The Exhaust must be installed firmly to the chassis using a rigid mount/s.

The Exhaust must be mounted to the rigid mount/s using 2 ROTAX silent blocks. (part 660920 and or 260657 allowed).

The deflection of the 2 silent blocks is the only Exhaust movement allowed.

The Exhaust must be mounted in a neutral position with no stress on the 2 silent blocks.

125 Mini MAX Perforated tube

BRMC 2026-27

The measurements in the diagram below are as follows:

(a) at least 480 mm

(b) minimum outside diameter of 61 mm

(c) maximum outside diameter of 26 mm

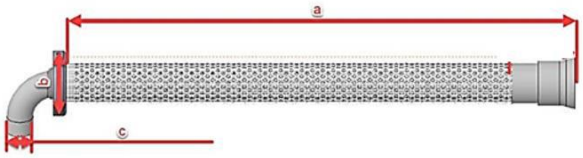

Note

Mini MAX perforated tube has a stamped ID marker "X" or "O" visible externally.

Note

The fine metal mesh must cover all the small holes on the perforated tube.

The only perforated tube allowed is the perforated tube with the circle supported by 3 linking points (when looking into the tube).

The perforated tube with the dome circle is not allowed.

See pictures below:

BRMC 2026-27

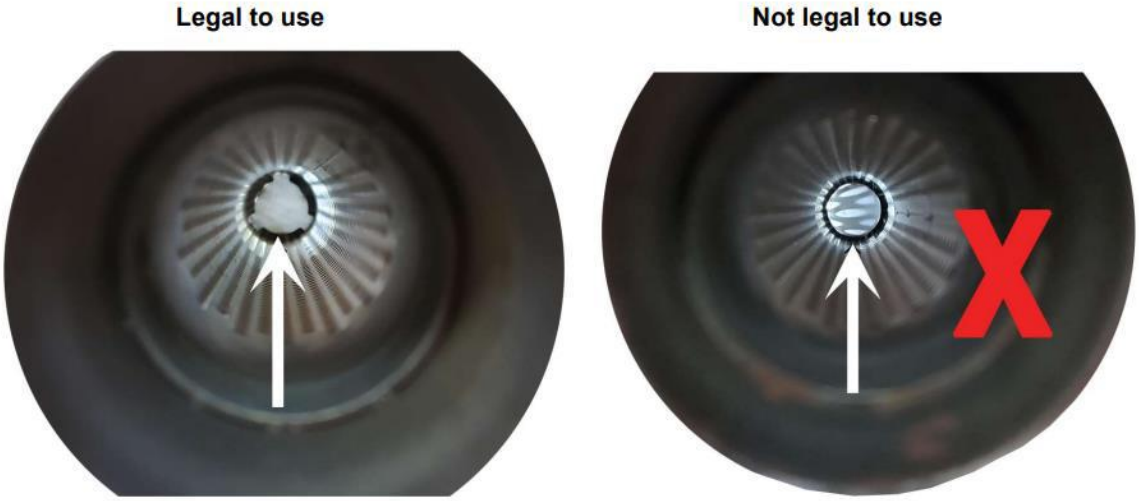

The only legal Isolation matting for 125 Mini MAX is:

	Measurement	Tolerance
New size minimum	490 x 180 mm	+10 mm -10 mm
New weight	141 Gram	+22 Gram -22 Gram
Used weight (old)	230 Gram	+120 Gram -120 Gram

6.19 JUNIOR MAX AND 125 SENIOR MAX:

The silencer must be mounted in a position where the direction of the 90° elbow outlet (direction of the hot exhaust gasses) does not harm any component of the chassis.

The gasket ring must be as supplied. A complete ring with no splits, breaks or excessive wear.

BRMC 2026-27

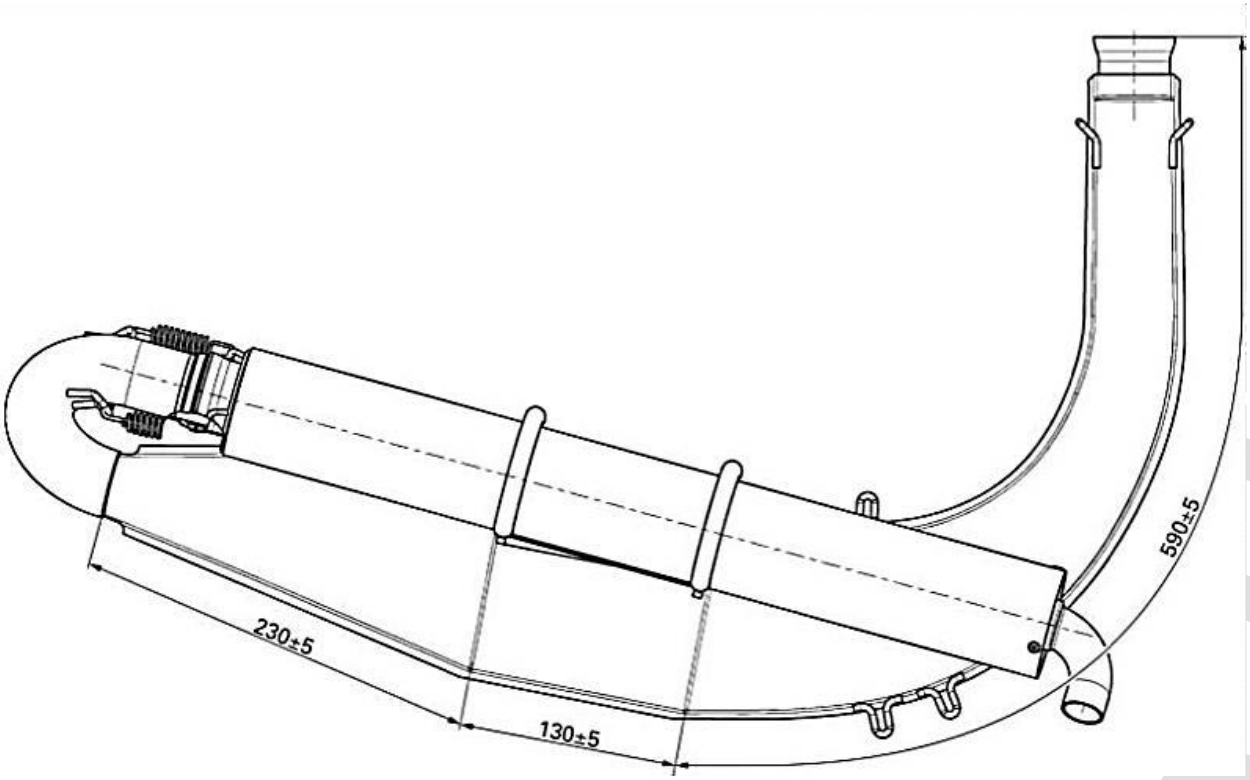

The only legal Isolation matting for 125 Junior and 125 Senior MAX is:

	Measurement	Tolerance
New size minimum	480 x 270 mm	+10 mm -10 mm
New weight	207 Gram	+31 Gram -31 Gram
Used weight (old)	245 Gram	+105 Gram -105 Gram

6.20 125 DD2 MAX:

BRMC 2026-27

The silencer must be mounted in a position where the direction of the 90° elbow outlet (direction of the hot exhaust gasses) does not harm any component of the chassis.

The gasket ring must be as supplied. A complete ring with no splits, breaks or excessive wear.

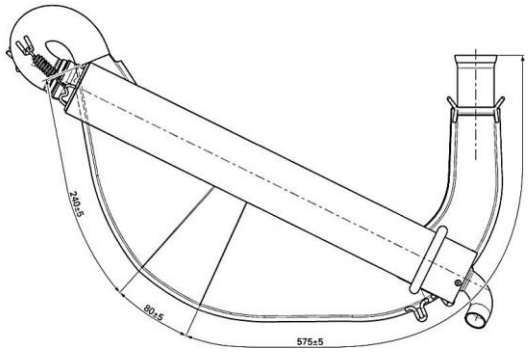

Dimensions to be checked	Length	Tolerance
Length of inlet cone	575 mm	+5 mm -5 mm
Length of cylindrical part of exhaust pipe	80 mm	+5 mm -5 mm
Length of end cone	240 mm	+5 mm -5 mm

The only legal Isolation matting for 125 DD2 MAX is:

ROTAX part number 297982	Measurement	Tolerance
New size minimum	480 x 270 mm	+10 mm -10 mm
New weight	207 Gram	+31 Gram -31 Gram
Used weight (old)	245 Gram	+105 Gram -105 Gram

6.21 ADDITIONAL SEAT SUPPORT (125 MAX DD2)

BRMC 2026-27

On the engine side, maximum one additional seat support can be used.

The additional seat support must be fastened to the engine using the Allen screw (2).

The distance sleeve (3) may be removed for this purpose.

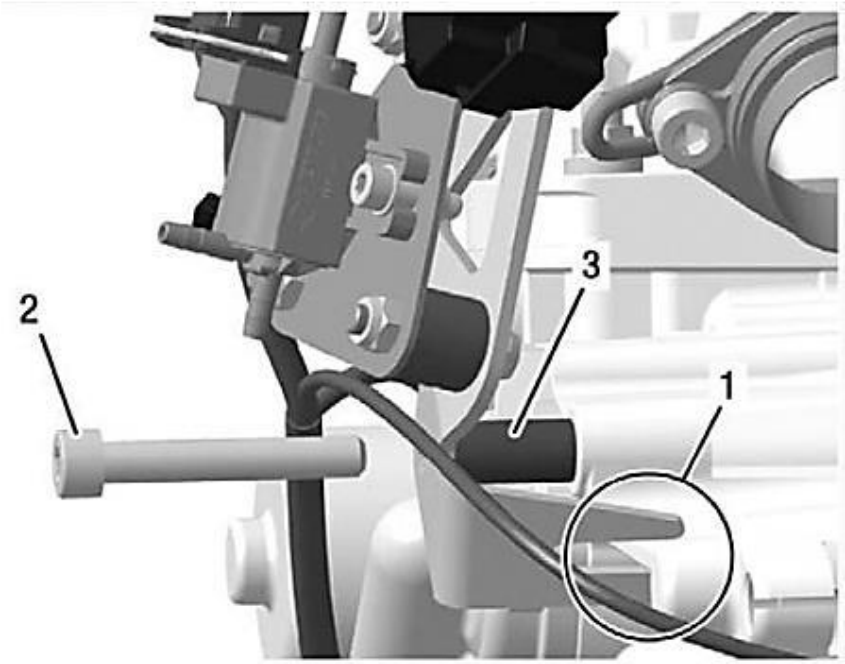

6.22 SPROCKETS / GEARING – 125 MICRO MAX AND 125 MINI MAX

For the categories listed below, the gear ratio is fixed and shall not be modified under any circumstances.
Only rear axle sprockets of 219 pitch are permitted.
The use of half-tooth sprockets, offset-tooth sprockets, non-standard tooth profiles, or any device, process, machining, treatment, or modification intended to alter the effective gear ratio is strictly prohibited.
The mandatory engine and rear axle sprocket combinations are:

	Engine	Rear Axle
125 Micro MAX	14	64
125 Mini MAX	14	74

During scrutineering, compliance must be verified using an original ROTAX rear sprocket of the specified tooth count as a reference gauge. The outside diameter and tooth count must match the corresponding original ROTAX rear sprocket.

Normal wear and tear resulting solely from use, which does not alter the effective gear ratio, is permitted. Any wear, damage, or modification that results in a change to the effective gear ratio shall be considered non-compliant.

---------- END OF TECHNICAL REGULATION ----------

BRMC 2026-27